Caddy 1996 , Polo Classic 1996 ➤

Mono Motronic injection and ignition system									
Engine ID	1F	ADZ							

Edition 11.1995

Protected by copyright. Copying for private or commercial purposes, in part or in whole, is not permitted unless authorised by Volkswagen AG. Volkswagen AG does not guarantee or accept any liability with respect to the correctness of information in this document. Copyright by Volkswagen AG.

satelettronica

List of Workshop Manual Repair GroupsList of Workshop Manual Repair GroupsList of Workshop Manual Repair Groups

Caddy 1996 , Polo Classic 1996 ➤

Mono Motronic injection and ignition system

Repair Group

01 - Self-diagnosis

24 - Mixture preparation, Injection

28 - Ignition system

Protected by copyright. Copying for private or commercial purposes, in part or in whole, is not permitted unless authorised by Volkswagen AG. Volkswagen AG does not guarantee or accept any liability with respect to the correctness of information in this document. Copyright by Volkswagen AG.

satelettronica

Technical information should always be available to the foremen and mechanics, because their careful and constant adherence to the instructions is essential to ensure vehicle road-worthiness and safety. In addition, the normal basic safety precautions for working on motor vehicles must, as a matter of course, be observed.

All rights reserved.
No reproduction without prior agreement from publisher.

Copyright © 2011 Volkswagen AG, Wolfsburg

00056405520

Contents

01 - Self-diagnosis 1

1 **Self diagnosis** 1
1.1 Self diagnosis 1
1.2 Function 1
1.3 Technical data of self diagnosis 1
1.4 Connecting fault reader V.A.G 1551 and selecting engine electronics control unit 2
1.5 Interrogating fault memory 3
1.6 Fault table 4
1.7 Erasing fault memory 7
1.8 Final control diagnosis 8
1.9 Coding control unit 10
1.10 Erasing values learnt by engine electronics control unit 11
1.11 Read measured value block and basic settings 12
1.12 Display group overview 12

24 - Mixture preparation, Injection 15

1 **Mono-Motronic injection and ignition system** 15
1.1 Mono-Motronic injection and ignition system 15
1.2 Fitting locations overview 15
1.3 Servicing injection part 17
1.4 Servicing injection unit 26
1.5 Safety precautions 31
1.6 Rules for cleanliness 31
1.7 Technical data 32
1.8 Idling speed check 32
1.9 Checking Lambda probe and Lambda control 33
1.10 Checking Lambda probe heating 35
1.11 Checking engine operating mode 36
1.12 Checking throttle valve positioner 37
1.13 Checking and adjusting idling switch 38
1.14 Checking sender for throttle valve positioner 42
1.15 Checking throttle valve potentiometer 43
1.16 Checking coolant temperature sender 45
1.17 Checking intake air temperature sender 48
1.18 Checking injector 50
1.19 Checking speed signal 52
1.20 Checking control unit voltage supply 53
1.21 Checking air conditioner and air conditioner compressor signals 55
1.22 Matching automatic gearbox control unit and throttle valve potentiometer to one another . . 56
1.23 Checking signal for automatic gearbox control unit 56
1.24 Matching engine electronic control unit to electronic immobilizer 58
1.25 Checking fuel pressure regulator and holding pressure 59
1.26 Checking intake air system for leaks (unmetered air) 61
1.27 Checking intake air preheating 62

28 - Ignition system 64

1 **Mono-Motronic injection and ignition system** 64
1.1 Mono-Motronic injection and ignition system 64
1.2 Servicing ignition part 64
1.3 Safety precautions 67
1.4 Adjustment data, Spark plugs 68
1.5 Installing distributor 68
1.6 Checking and adjusting ignition timing 69
1.7 Checking ignition timing control 71

Protected by copyright. Copying for private or commercial purposes, in part or in whole, is not permitted unless authorised by Volkswagen AG. Volkswagen AG does not guarantee or accept any liability with respect to the correctness of information in this document. Copyright by Volkswagen AG
satelettronica

1.8 Checking Hall sender 71
1.9 Checking ignition transformer 73
1.10 Checking ignition transformer output stage 73

Protected by copyright. Copying for private or commercial purposes, in part or in whole, is not permitted unless authorised by Volkswagen AG. Volkswagen AG does not guarantee or accept any liability with respect to the correctness of information in this document. Copyright by Volkswagen AG.

satelettronica

01 - Self-diagnosis

1 - Self diagnosis

1.1 - Self diagnosis

Note:

The self-diagnosis monitors only a part of the injection and ignition system. For fault finding the binder "Fault finding engine" must also be used in every case.

1.2 - Function

The Mono-Motronic control unit (J257) for the ignition and fuel injection system is equipped with a fault memory.

If faults occur in the sensors and components being monitored, they will be stored in the fault memory together with an indication of the type of fault.

The faults stored can be read-out with the fault reader V.A.G 1551 or the vehicle system tester V.A.G 1552 => Page 3 .

The fault memory must be erased after the fault(s) has been eliminated => Page 7 .

A fault relating to the function of the Lambda control system can only be interrogated after a test drive of at least 10 minutes duration.

Faults which only occur sporadically will have the addendum "sporadic fault" on the print out. These faults will be indicated on the display by the addendum "/SP". The cause of sporadic faults can be e.g. a loose contact or a brief open circuit. If a sporadic fault does not occur again within 10 engine starts, it will be erased from the fault memory.

1.3 - Technical data of self diagnosis

Equipped with

- Fault memory: Non-volatile memory and volatile memory1)
- Rapid data transfer

1) Will be cancelled after 10th engine start if fault has not occurred again.

Control unit identification

=> Page 2 ; connecting fault reader V.A.G 1551 and selecting engine electronics control unit

Selectable functions

The prerequisites for selecting the desired functions can be taken from the table.

satelettronica
Protected by copyright. Copying for private or commercial purposes, in whole or in part, is not permitted unless authorised by Volkswagen AG. Volkswagen AG does not guarantee or accept any liability with respect to the correctness of information in this document. Copyright by Volkswagen AG.

Function	Prerequisite	
	Engine stationary, ignition switched on	Engine running at idling speed
02 Interrogate fault memory	---1)	x
03 Final control diagnosis	x	---
04 Introduction of basic setting	x	x
05 Erase fault memory	-	x
06 End output	x	x
08 Read measured value block	x	x
10 Adaption1)	x	---

1) If the fault memory is interrogated with the engine stationary, the fault "Hall sender -G40, no signal" will be displayed even if there is no fault present.

1.4 - Connecting fault reader V.A.G 1551 and selecting engine electronics control unit

Special tools, testers and auxiliary items

- Fault reader V.A.G 1551 with cable V.A.G 1551/3

Note:

The vehicle system tester V.A.G 1552 can be used instead of the fault reader V.A.G 1551, however a print-out is not possible.

Check conditions

- Fuse 21 OK.
- Battery voltage at least 11 V
- Earth connections on gearbox or engine OK.
- Air conditioner switched off

Work sequence

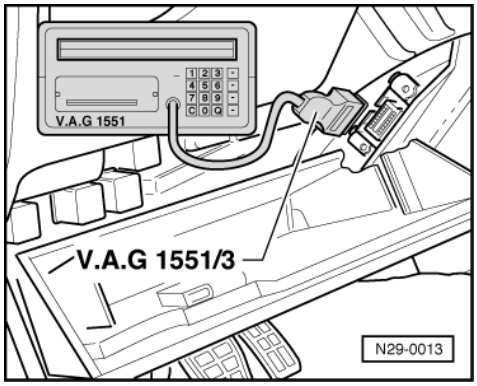

- -> Fold down left shelf.
- Connect fault reader (or vehicle system tester) with cable V.A.G 1551/3.

After the fault reader has been connected:

Protected by copyright. Copying for private or commercial purposes, in part or on whole, is not permitted unless authorised by Volkswagen AG. Volkswagen AG does not guarantee or accept any liability with respect to the correctness of information in this document. Copyright by Volkswagen AG.
satelettronica

- Depending upon desired function:
  Switch on ignition
  or
  Start engine => Page 1 , Table "Selectable functions".

Notes:

- If the display does not indicate as described in the work sequence:

=> Fault reader operating instructions

- If due to an input fault "Fault in the data transfer!" is displayed, pull wire off fault reader, reconnect and repeat work step.

- Operate fault reader taking into account the information on the display:
- Input 1 for "Rapid data transfer".
- Input 01 for address word "Engine electronics" and confirm with Q.

-> The fault reader V.A.G 1551 display will show the control unit identification, e.g.:

```
6K0907311B 1.6l     R4 MONO     1.2.3
DGC
Coding 01
```

- 6K0 907 113 B = Part No. of the control unit
- 1.6 ltr. = Engine capacity
- R4 = Type of engine (4 Cyl. in-line engine)
- MONO 1.2.3 = System designation and version
- DGC = Programme level number
- Coding 01 = Coding variants

- Checking control unit coding => Page 10
- Press ⇒ key.

-> Indicated on display:

```
Rapid data transfer     HELP
Select function XX
```

- Further measures see repair procedures.

1.5 - Interrogating fault memory

Special tools, testers and auxiliary items

- Fault reader V.A.G 1551 or vehicle system tester V.A.G 1552 with cable V.A.G 1551/3

Work sequence

- Connect fault reader V.A.G 1551 (V.A.G 1552) and select engine electronics control unit (address word 01); selection is carried out with engine idling.
  => Page 2

Only when engine does not start:

- Operate starter for approx. 6 seconds and then do not switch off the ignition.

Note:

When the fault memory is interrogated with engine stationary without having operated the starter for at least 6 seconds, the fault "Hall sender -G40, no signal" will be displayed, even if no fault is present.

- Switch on fault reader printer with the print button. The warning lamp in key lights up.

Protected by copyright. Copyright by Volkswagen AG. Volkswagen AG does not guarantee or accept any liability with respect to the correctness of information in this document. Copying for commercial purposes, in part or in whole, is not permitted unless authorised by Volkswagen AG.

satelettronica

-> Indicated on display:

```
Rapid data transfer      HELP
Select function XX
```

- Operate fault reader taking into account the information on the display:
- Input 02 for "Interrogate fault memory" function and confirm with Q.

-> The number of faults stored or "No fault recognised!" will be shown on the display.

```
X Faults recognised!
```

If one or more faults are stored:

The stored faults will be displayed and printed out one after the other.

-> After the stored faults have been printed out, the display will show:

```
Rapid data transfer      HELP
Select function XX
```

- Input 06 for "End output" function and confirm with Q.
- Locate and eliminate faults printed out as per fault table => Page 4 .
- Erasing fault memory => Page 7

If no fault is stored:

- Press ⇒key.

-> Indicated on display:

```
Rapid data transfer      HELP
Select function XX
```

- Input 06 for "End output" function and confirm with Q.

Note:

If the self-diagnosis has not detected a fault, use the appropriate fault table in "Fault finding engine" binder for further fault finding.

1.6 - Fault table

Notes:

- The fault table is listed according to the 5 digit fault code on the left.
- Explanation of the fault types (e.g. "open circuit/short circuit to earth"):

=> Fault reader operating instructions

- If components are indicated as being defective:
  First check the wiring and connections to these components as well as the system earth connections according to current flow diagram. Only when no fault can be found, renew component. This is particularly relevant if the faults are indicated as "occurring sporadically" (SP).

V.A.G 1551 print-out	Possible fault cause	Fault elimination
No fault recognised!	If a fault is present: Fault not recognised by self diagnosis	Continue fault finding using fault table in "Engine fault finding" binder.
00282 Speed sender G68	Speedometer (G21) defective	- Check speed signal =>Page 52
no signal	Wiring open circuit	

Protected by copyright. Copying for private or commercial purposes, in part or in whole, is not permitted unless authorised by Volkswagen AG. Volkswagen AG does not guarantee or accept any liability with respect to the correctness of information in this document. Copyright by Volkswagen AG.
satelettronica

V.A.G 1551 print-out	Possible fault cause	Fault elimination
	If no display appears on speedometer: Speedometer sender (G22) defective	- Continue fault finding according to MFI fault finding programme in "Current flow diagram, Electrical fault finding and Fitting locations" binder.
00282 Throttle valve positioner V60 implausible signal	Wiring open circuit	- Check V60 =>Page 37
	V60 defective	

V.A.G 1551 print-out	Possible fault cause	Fault elimination
00515 Hall sender G40 no signal	G40 defective	- Check G40 =>Page 71
	Wiring open circuit	
00516 Idling switch F60 Short to earth	F60 defective, always closed	- Check F60 =>Page 38
	Wiring has short to earth	
Open circuit/short circuit to positive	F60 defective, always open	- Check F60 =>Page 38
	Wiring open circuit	
	Accelerator cable incorrectly adjusted	- Adjust accelerator cable => Repair Group 20; Removing and installing parts of the fuel supply system; adjusting accelerator cable

V.A.G 1551 print-out	Possible fault cause	Fault elimination
00518 Throttle valve potentiometer G69 Short to earth	Wiring/G69 has short to earth	- Check G69 => Page 43
Open circuit/short to earth	Wiring open circuit	
	G69 defective	
Open circuit/short to earth	Wiring open circuit	
	G69 defective	
Short to positive	Wiring open circuit	
	G69 defective	
implausible signal	G69 defective	

V.A.G 1551 print-out	Possible fault cause	Fault elimination
00522 Coolant temperature sender -G62	G62 defective	- Check G62 =>Page 45
	Wiring has short to earth	
Open circuit/short to positive	G62 defective	
	Wiring open circuit	
implausible signal	G62 defective	
00523 Intake air temperature sender G42	G42 defective	- Check G42 =>Page 48
Short to earth	Wiring has short to earth	
Open circuit/short to positive	G42 defective	
	Wiring open circuit	

V.A.G 1551 print-out	Possible fault cause	Fault elimination
00525		

Copyright by Volkswagen AG. Copying for private or commercial purposes, in part or in whole, is not permitted unless authorised by Volkswagen AG. Volkswagen AG does not guarantee or accept any liability with respect to the correctness of information in this document.
satelettronica

V.A.G 1551 print-out	Possible fault cause	Fault elimination
Lambda probe G39	G39 defective	- Check Lambda probe and Lambda control =>Page 33
No signal	Wiring open circuit	
Short to earth	G39 defective	
	Wiring has short to earth	
Short to positive	G39 defective	
	Wiring has short to positive	
00532 Supply voltage1)		
Signal too low	Battery voltage below 10.0 V	- Check battery

1) Fault recognition: Motronic control unit (J220) checks voltage after engine has been running for 3 minutes

V.A.G 1551 print-out	Possible fault cause	Fault elimination
00537 Lambda control1)	Lambda probe heating defective	- Check probe heating voltage supply =>Page 35
Regulating limit exceeded		- Check probe heating for continuity
	Exhaust system leaking between cylinder head and catalyst	- Check exhaust system
	Misfiring	- Check ignition part components =>Page 64
	Fuel pressure to low	- Check fuel pressure regulator =>Page 59
Regulating limit not reached	Fuel pressure to high	
	Activated charcoal filter solenoid valve 1 N80 leaking, sticking	- Check N80 =>Page 8 ; Final control diagnosis

1) After repairing the faults the values learnt by the Mono Motronic control unit must be erased => Page 11 ; Erasing values learnt by engine electronics control unit

V.A.G 1551 print-out	Possible fault cause	Fault elimination
00561 Mixture adaption1)	Fuel pressure not OK	- Check fuel pressure regulator =>Page 59
Adaption limit exceeded	Misfiring	- Check ignition part components =>Page 64
Adaption limit not reached		
	Exhaust system leaking between cylinder head and catalyst	- Check exhaust system
00670 Throttle valve positioner sender G127	G127 defective	- Check G127 =>Page 42
no signal	Wiring open circuit	

1) After repairing the faults the values learnt by the Mono Motronic control unit must be erased => Page 11 ; Erasing values learnt by engine electronics control unit

V.A.G 1551 print-out	Possible fault cause	Fault elimination
17978		

Protected by copyright. Copyright by Volkswagen AG. Volkswagen AG does not guarantee or accept any liability with respect to the correctness of information in this document. Copying for private or commercial purposes, in part or in whole, is not permitted unless authorised by Volkswagen AG.
satelettronica

V.A.G 1551 print-out	Possible fault cause	Fault elimination
Engine control unit blocked	The electronic immoblizer control unit (J362) has blocked the Mono Motronic control unit	- Match the engine electronic control unit to the electronic immobilizer Check electronic immobilizer: => Repair group 96; Servicing electronic immobilizer Then start engine and erase the engine control unit fault memory
65535 Control unit defective	Components in Mono Motronic control unit (J257)	- Renew J257 =>Page 19 , item 2

1.7 - Erasing fault memory

Special tools, testers and auxiliary items

- Fault reader V.A.G 1551 or vehicle system tester V.A.G 1552 with cable V.A.G 1551/3

Test conditions

- Fault eliminated

Work sequence

- Carry out road test of at least 10 minutes duration.
  When doing this
  - The coolant temperature must reach at least 80 °C,
  - The engine speed must be increased to at least 3000 rpm,
  - The accelerator pedal must be floored briefly.
- Connect fault reader V.A.G 1551 (V.A.G 1552) and select engine electronics control unit (address word 01); selection is carried out with engine idling.
  => Page 2

-> Indicated on display:

```
Rapid data transfer      HELP
Select function XX
```

- Input 02 for "Interrogate fault memory" function and confirm with Q.

```
Rapid data transfer      HELP
Select function XX
```

-> Press ⇒key until all faults still stored have been displayed and the display reads:

- Input 05 for "Erase fault memory" function and confirm with Q.

-> Indicated on display:

```
Rapid data transfer
Fault memory is erased!
```

- Press ⇒ key.

-> Indicated on display:

```
Rapid data transfer      HELP
Select function XX
```

- Input 06 for "End output" function and confirm with Q.
- Carry out a further road test and interrogate fault memory again. No faults should be shown.

Copyright by Volkswagen AG. Volkswagen AG does not guarantee or assume any liability with respect to the correctness of information in this document. Copyright by Volkswagen AG. Copying for private or commercial purposes, part or in whole, is not permitted unless authorized by Volkswagen AG.

satelettronica

1.8 - Final control diagnosis

The final control diagnosis activates the following components in the stated sequence:

1. Throttle valve positioner (V60)

2. Intake air preheating relay (J81)

3. Activated charcoal filter solenoid valve 1 (N80)

Special tools, testers and auxiliary items

- Fault reader V.A.G 1551 or vehicle system tester V.A.G 1552 with cable V.A.G 1551/3
- Test box V.A.G 1598/18
- Hand multimeter V.A.G 1526 or multimeter V.A.G 1715
- Diode test lamp V.A.G 1527
- Adapter set V.A.G 1594
- Current flow diagram

Check conditions

- Throttle valve potentiometer (G69) OK.
- Fuse 15 and 21 OK.

Work sequence

Note:

If the final control diagnosis is to be repeated without the engine being started in between time, switch ignition off for approx. 20 seconds.

- Connect fault reader V.A.G 1551 (V.A.G 1552) and select engine electronics control unit (address word 01); carry out selection with ignition switched on. => Page 2

-> Indicated on display:

```
Rapid data transfer    HELP
Select function XX
```

- Operate fault reader taking into account the information on the display:
- Input 03 for "Final control diagnosis" function.

-> Indicated on display:

```
Rapid data transfer     Q
03 Final control diagnosis
```

Activate throttle valve positioner (V60):

- Confirm input with Q button.

-> Indicated on display:

```
Final control diagnosis
Throttle valve positioner-V60
```

The throttle valve positioner plunger must move in and out until switching to the next final control by pressing the ⇒key.

If the throttle valve positioner does not move:

- Check activation =>Page 37

Activate intake manifold preheating relay (J81):

Protected by copyright. Copying for private or commercial purposes, in part or in whole, is not permitted unless authorised by Volkswagen AG. Volkswagen AG does not guarantee or accept any liability with respect to the correctness of information in this document. Copyright by Volkswagen AG.
satelettronica

- Press ⇒key.

-> Indicated on display:

```
Final control diagnosis
Intake air preheating relay-J81
```

The intake air preheating relay (on relay plate in footwell driver's side) must click until switching to the next final control by pressing the ⇒key.

If the relay does not click:

- Check intake air preheating relay:

=> Current flow diagrams, Electrical fault finding and Fitting locations

Activate solenoid valve 1 for activated charcoal filter (N80):

- Press ⇒ button.

-> Indicated on display:

```
Final control diagnosis
Activ. charcoal filter solenoid valve
1     -N80
```

The solenoid valve (on air cleaner) must click until the final control diagnosis is ended by pressing the ⇒key.

If the solenoid valve clicks:

- Press ⇒ key to end the final control diagnosis.

-> Indicated on display:

```
Function is not recognized or cannot
□
be carried out at the moment!
```

- Press ⇒ key again.

Note:

After completion of the final control diagnosis input 06 for "End output" function and confirm with Q.

If the solenoid valve does not click:

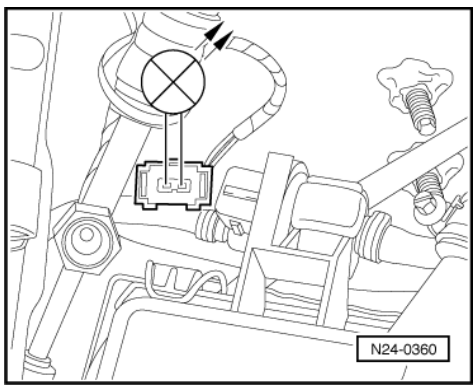

- -> Pull connector off valve and connect diode test lamp V.A.G 1527 with aux. cables from V.A.G 1594 to disconnected connector.
  The LED must flash

LED flashes:

Protected by copyright. Copying for private or commercial purposes, in part or in whole, is not permitted unless authorised by Volkswagen AG. Volkswagen AG does not guarantee or accept any liability with respect to the correctness of information in this document. Copyright by Volkswagen AG.
satelettronica

- Switch off ignition
- Renew solenoid valve.

LED does not flash:

- Switch off ignition

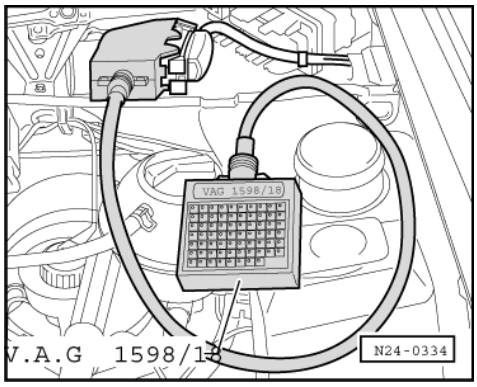

- -> Connect test box V.A.G 1598/18 to control unit wiring loom.

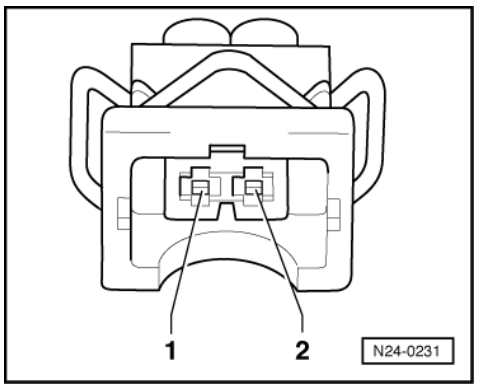

- -> Check wire between test box socket 3+2 pin connector contact 1 according to current flow diagram for open circuit.
  Wire resistance: max. 1.5 ω
- Also check wire for short to battery positive and earth.
  Specification: ∞ω
- Check wire between 2 pin connector contact 2 and relay plate according to current flow diagram for open circuit.
  Wire resistance: max. 1.5 ω

If no wiring fault is detected:

- Renew Mono Motronic control unit (J257)
  =>Page 19 , item 2 .

1.9 - Coding control unit

Special tools, testers, measuring instruments and auxiliary items required

- Fault reader V.A.G 1551 or vehicle system tester V.A.G 1552 with cable V.A.G 1551/3
- Test box V.A.G 1598/18
- Hand multimeter V.A.G 1526 or multimeter V.A.G 1715
- Adapter set V.A.G 1594
- Current flow diagram

satelettronica
Protected by copyright. Copying for private or commercial purposes, in part or in whole, is not permitted unless authorised by Volkswagen AG. Volkswagen AG does not guarantee or accept any liability with respect to the correctness of information in this document. Copyright by Volkswagen AG.

Test conditions

- No faults stored in fault memory
  => Page 3 , interrogating fault memory

Work sequence

- Connect fault reader V.A.G 1551 (V.A.G 1552) and select engine electronics control unit with the "Address word" 01. When doing this the ignition must be switched on.
  (Connecting fault reader and selecting engine electronics control unit => Page 2 .)

-> The fault reader display will show the control unit identification.

```
1 HO 907 311P 1.8 ltr.      R4 MONO
1.2.3      DGC
Coding 01
```

- Coding 01 =Manual gearbox
- Coding 02 =Automatic gearbox

If the display does not indicate as described:

- Switch off ignition.

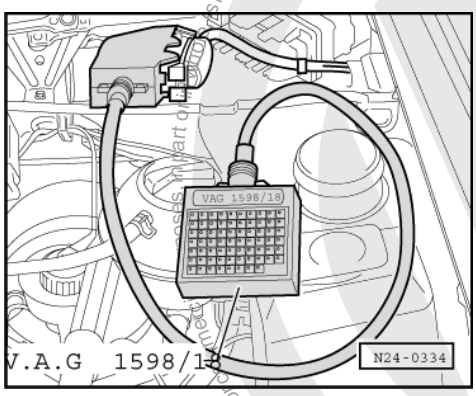

- -> Connect test box V.A.G 1598/18 to control unit wiring loom.
- Switch ignition on.
- Check voltage with multimeter and aux. cables from V.A.G 1594 between test box sockets 1 and 40.
  Specification:
  Vehicles with automatic gearbox: min. 11 V
  Vehicles with manual gearbox: 0 V

If the specification is not obtained:

- Check wiring according to current flow diagram.

1.10 - Erasing values learnt by engine electronics control unit

Special tools, testers and auxiliary items

- Fault reader V.A.G 1551 or vehicle system tester V.A.G 1552 with cable V.A.G 1551/3

Work sequence

- Connect fault reader V.A.G 1551 (V.A.G 1552) and select engine electronics control unit (address word 01); carry out selection with ignition switched on. => Page 2

-> Indicated on display:

Protected by copyright. Copying for private or commercial purposes, in part or in whole, is not permitted unless authorised by Volkswagen AG. Volkswagen AG does not guarantee or accept any liability with respect to the correctness of information in this document. Copyright by Volkswagen AG.
satelettronica

```
Rapid data transfer     HELP
Select function XX
```

- Operate fault reader taking into account the information on the display:
- Input 10 for "Adaption" function and confirm with Q.

-> Indicated on display:

```
Adaption
Feed in channel number XX
```

- Input 00 for channel number 0 and confirm with Q.

-> Indicated on display:

```
Adaption     Q
Erase learnt values?
```

- Confirm entry by pressing Qkey.

-> Indicated on display:

```
Adaption
Learnt values have been erased
```

- Conclude adaption by pressing ⇒ key.

1.11 - Read measured value block and basic settings

The measured values in the functions read measured value block and basic setting are described during the individual component test. This table serves only as an overview.

Note:

To change to another display group proceed as follows:

Display group	V.A.G 1551	V.A.G 1552
Higher	Press key 3	Press ↑key
Lower	Press key 1	Press ↓key

1.12 - Display group overview

Display group 00 (decimal displayed value)

▪ Engine not running, ignition switched on

Display zones

1	2	3	4	5	6	7	8	9	10	
										Adaption value for solenoid valve 1 for activated charcoal filter
										Battery voltage
										Adaption value for idling speed stabilization
										Adaption value for basic air requirement
										Adaption value for mixture correction
										Adaption value for injector
										Idling switch
										Throttle valve potentiometer -path 1 and 2
										Throttle valve potentiometer -path 1

Protected by copyright. Copying for private or commercial purposes, in part or in whole, is not permitted unless authorised by Volkswagen AG. Volkswagen AG does not guarantee or accept any liability with respect to the correctness of information in this document. Copyright by Volkswagen AG.
satelettronica

Display group 00 (decimal displayed value)
Coolant temperature

Display group 00 (decimal displayed value)

- Engine idling

Display zones

1	2	3	4	5	6	7	8	9	10

10 Adaption value for solenoid valve 1 for activated charcoal filter
9 Battery voltage
8 Adaption value for idling speed stabilization
7 Adaption value for basic air requirement
6 Adaption value for mixture correction
5 Lambda control
4 Intake air temperature
3 Engine speed
2 Throttle valve potentiometer -path 1
1 Coolant temperature

	Display zones			
	1	2	3	4
Display group 01 -Idling test-				
Display	0...xxxx rpm	-xx.x...xxx.x °C	0.x.x... 1.xx	xxxxxxxx
Indicated	Engine speed	Coolant temperature	Lambda correction factor	Operating conditions2)
Display group 02 -Injection period, intake air temperature-				
Display	0...xxxx rpm	0.0...xxx.x ms	0.0...xx.x V	-xx.x...xxx.x °C
Indicated	Engine speed	Injection period	Battery voltage	Intake air temperature
Display group 03 -Engine load condition-				
Display	0...xxxx rpm	0...xxx %	0...xxx <°	-xx.x° before TDC...xx.x° after TDC
Indicated	Engine speed	Engine load signal	Throttle valve angle (calculated figure, dependent on throttle valve potentiometer)	Ignition timing figure (calculated figure, dependent on the ignition timing adjustment)

1) Relevance of figures in 8 digit number block => Page 14 .

2) This value must not be used to check or adjust the ignition timing.

	Display zones			
	1	2	3	4
Display group 04 -Operating conditions-				
Display	0...xxxx rpm	0...xxx %	0,>4>,>7	xxxxxxxx
Indicated	Engine speed	Engine load signal	Speed	Operating condition1)
Display group 05 -Mixture control-				
Display	0...xxxx rpm	0...xxx %	0.xx...1.xx	-xx.x...xx.x %
Indicated	Engine speed	Duty cycle from activated charcoal filter solenoid valve 1	Lambda correction factor	Mixture correction factor

1) Relevance of figures in 8 digit number block => Page 14 .

satelettronica

Significance of figures in 8 digit number block

Significance when displayed digit = 1									
x	x	x	x	x	x	x	x	Display group 01	Display group 04
1								---	---
	1							Idling switch closed	---
		1						---	---
			1					Air conditioner compressor switched on	Acceleration or full load enrichment
				1				Air conditioner switched on	Full load recognised
					1			---	Part load recognised
						1		Tightening torque reduction1)	Idling switch closed
							1	Driving stage engaged	Fuel cut-off active

1) Display must always show 1.

Protected by copyright. Copying for private or commercial purposes, in part or in whole, is not permitted unless authorised by Volkswagen AG. Volkswagen AG does not guarantee or assume any liability with respect to the correctness of information in this document. Copyright by Volkswagen AG.

satelettronica

24 - Mixture preparation, Injection

1 - Mono-Motronic injection and ignition system

1.1 - Mono-Motronic injection and ignition system

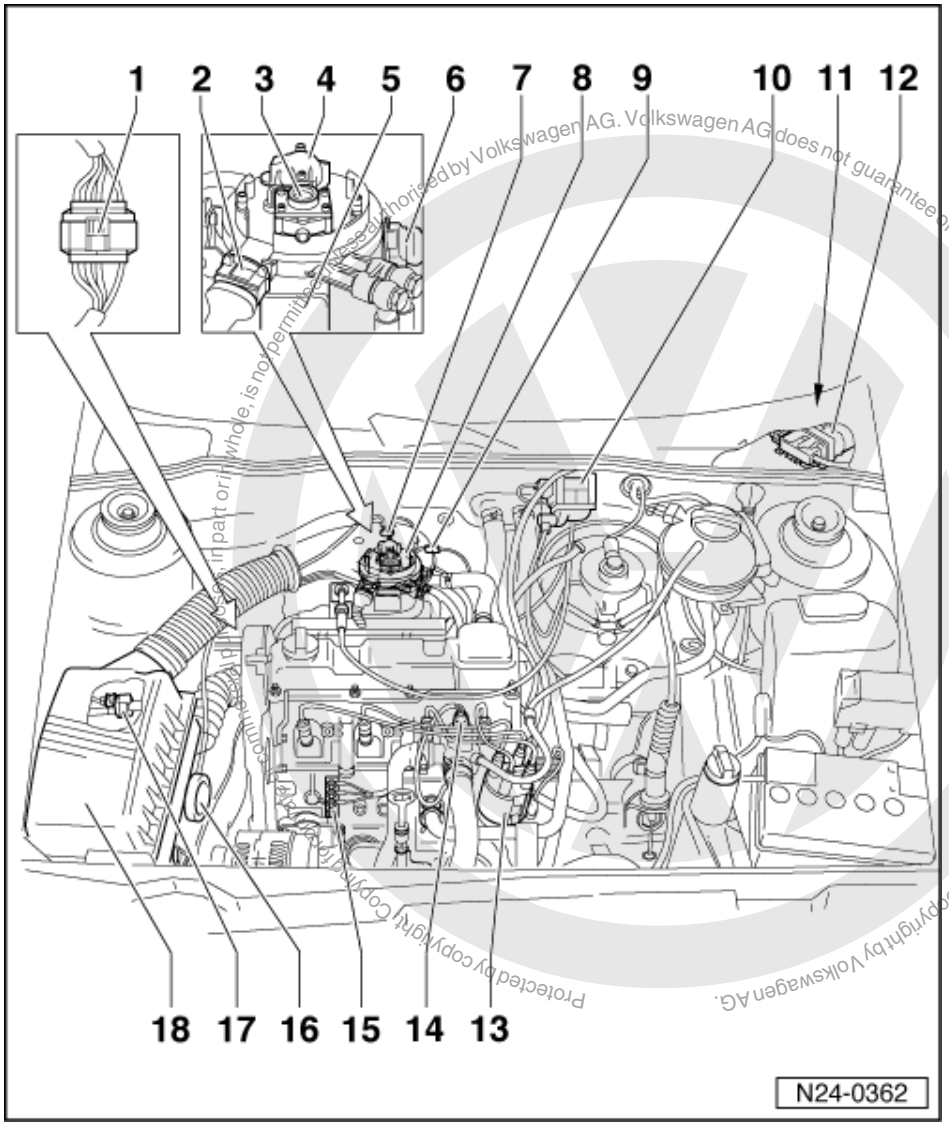

1.2 - Fitting locations overview

1 4 pin connector
- For Lambda probe (G39)
- On engine mount - Right

2 Connector
- For injector and intake air temperature sender

3 Fuel pressure regulator

4 Injector (N30) with intake air temperature sender (G42)

5 Throttle valve positioner (V60) with idling switch (F60)

satelettronica

6 Throttle valve potentiometer (G69)

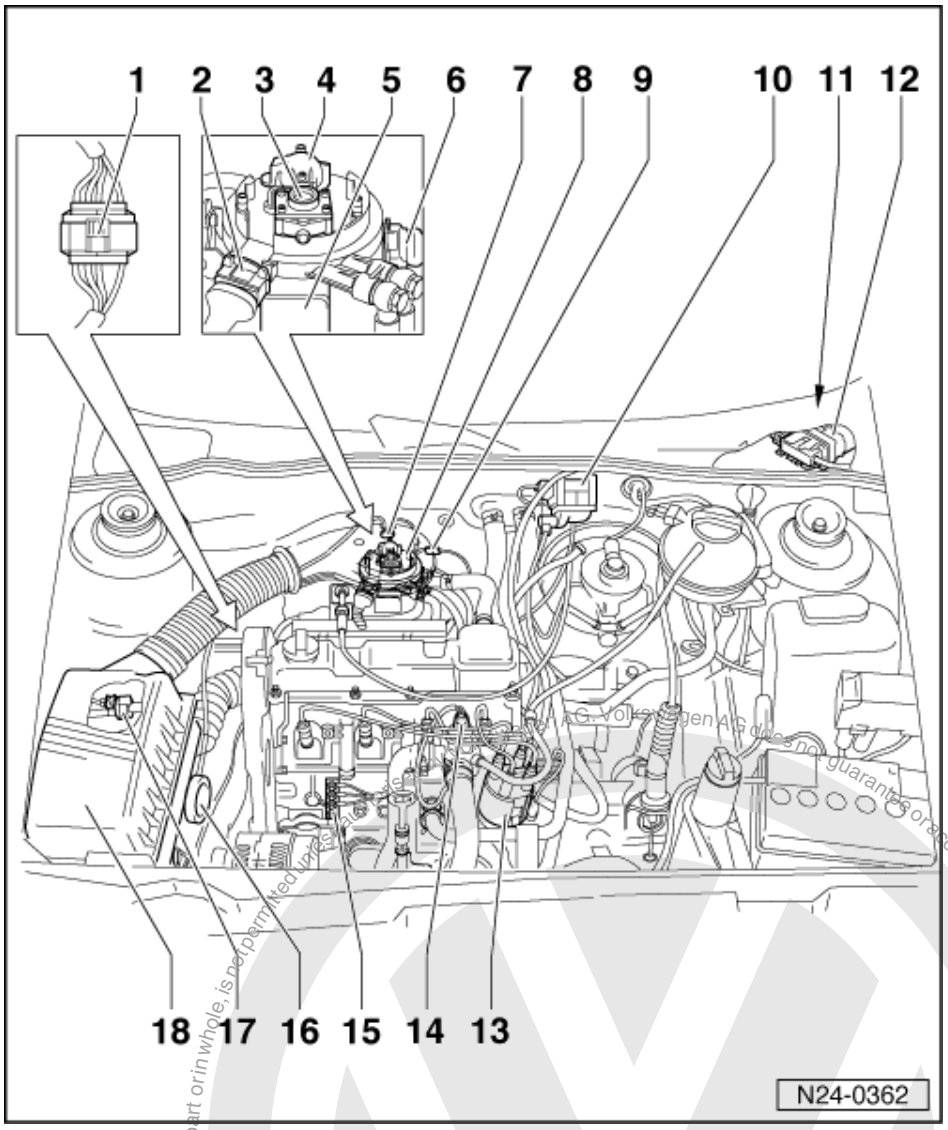

7 Temperature regulator
- For intake air preheating

8 Injection unit

9 Connector for intake manifold preheating

10 Ignition transformer (N152)
- With ignition transformer output stage (N157)
- =>Page 65

11 Intake manifold preheating relay (J81)
- Location: On relay plate in driver's side footwell

12 Mono Motronic injection and ignition system control unit (J257)

Protected by copyright. Copying or distribution of this document, in part or in whole, is not permitted unless authorised by Volkswagen AG. Copyright by Volkswagen AG. Volkswagen AG does not guarantee or accept any liability with respect to the correctness of information in this document.
satelettronica

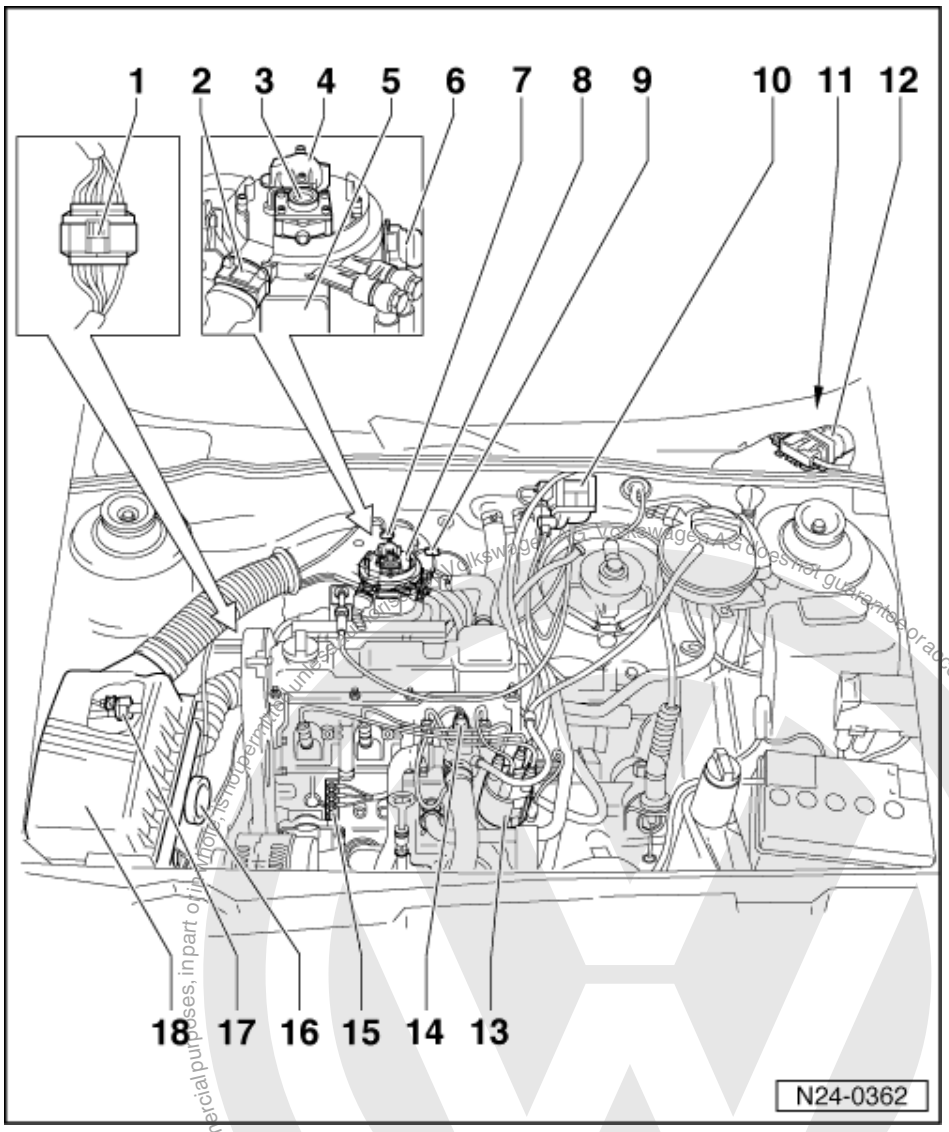

13 Distributor with Hall sender (G40)
- =>Page 66

14 Coolant temperature sender (G62)
- with coolant temperature indicator sender (G2)

15 Earth connection

16 Vacuum unit
- For intake air preheating

17 Activated charcoal filter solenoid valve 1 (N80)

=> Repair group 20, removing and installing parts of the fuel supply system, removing and installing parts of the activated charcoal filter system

18 Air cleaner

1.3 - Servicing injection part

Servicing ignition part

satelettronica

=> Repair group 28

Notes:

- The control unit for the fuel injection and ignition system is equipped with a fault memory. Before carrying out repairs, adjustment work and fault finding the fault memory must be interrogated and the vacuum connections checked (outside air).
- Components marked with * are checked via the self diagnosis.
  => Page 3 , interrogating fault memory
- Components marked with ** are checked via the final control control diagnosis => Page 8 .
- Always renew spring-type hose clips with screw-type hose clips.
- For trouble-free operation of the electrical components a voltage of at least 11.5 V is necessary.
- If the engine starts, runs for a short period and then stops, after fault finding, repairs or component tests, then the fault may lie with the immobilizer which is blocking the engine control unit. The fault memory must be interrogated and if necessary the control unit matched => Page 58 .

- During some checks it can happen that the control unit will recognise and store a fault. Therefore after completing all checks and repairs the fault memory must be interrogated and if necessary erased.
  => Page 3 , interrogating fault memory
- Do not use sealants containing silicone. Particles of silicone drawn into the engine, will not be burnt in the engine and damage the Lambda probe.

Safety precautions =>Page 31
Rules for cleanliness => Page 31
Technical data => Page 32
Checking intake air system for leaks (unmetered air) => Page 61 .

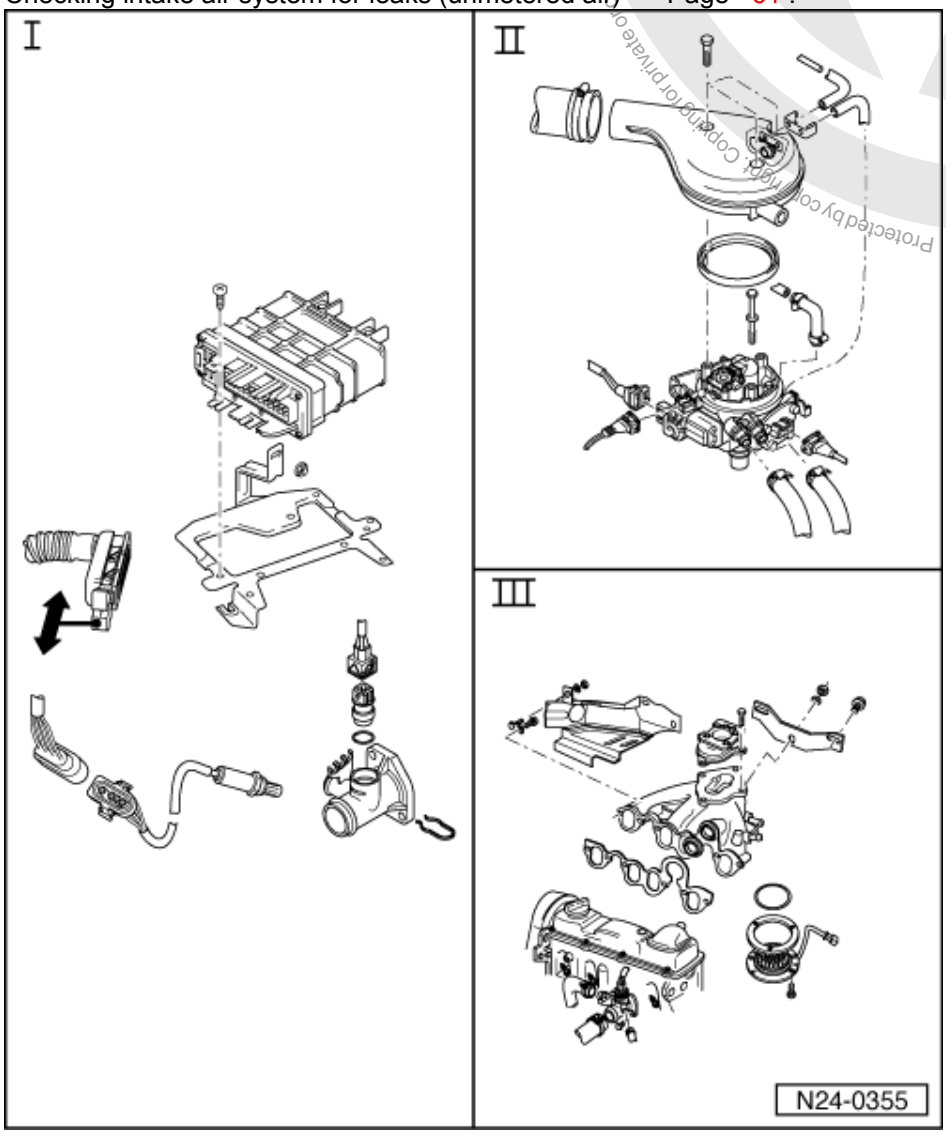

Protected by copyright. Copying for private or commercial purposes, in part or in whole, is not permitted unless authorised by Volkswagen AG. Volkswagen AG does not guarantee or accept any liability with respect to the correctness of information in this document. Copyright by Volkswagen AG.
satelettronica

I => Page 19

II => Page 22

III => Page 24

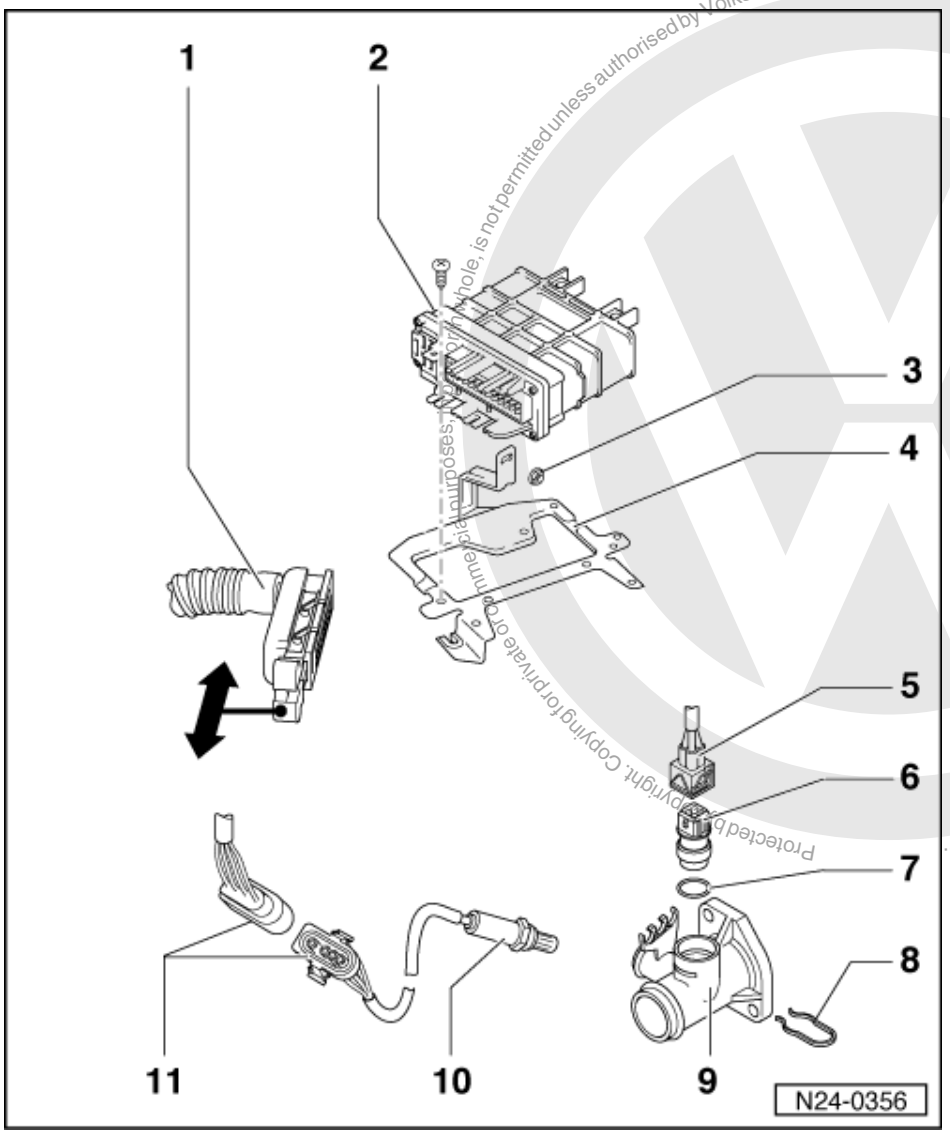

Protected by copyright. Copying for private or commercial purposes, in whole, is not permitted unless authorised by Volkswagen AG. Volkswagen AG does not guarantee or accept any liability with respect to the correctness of information in this document. Copyright by Volkswagen AG.
satelettronica

Part I

1 Connector
- Only disconnect or connect with ignition switched off
- Unlatch to disconnect

2 Mono Motronic control unit (J257)*
- For injection system, Lambda regulation, activated charcoal filter solenoid valve, speed governing via fuel pump relay, intake air preheating control, ignition and self diagnosis
- Location: in plenum chamber, left
- On replacement, the control unit must be matched to the electronic immobilizer => Page 58

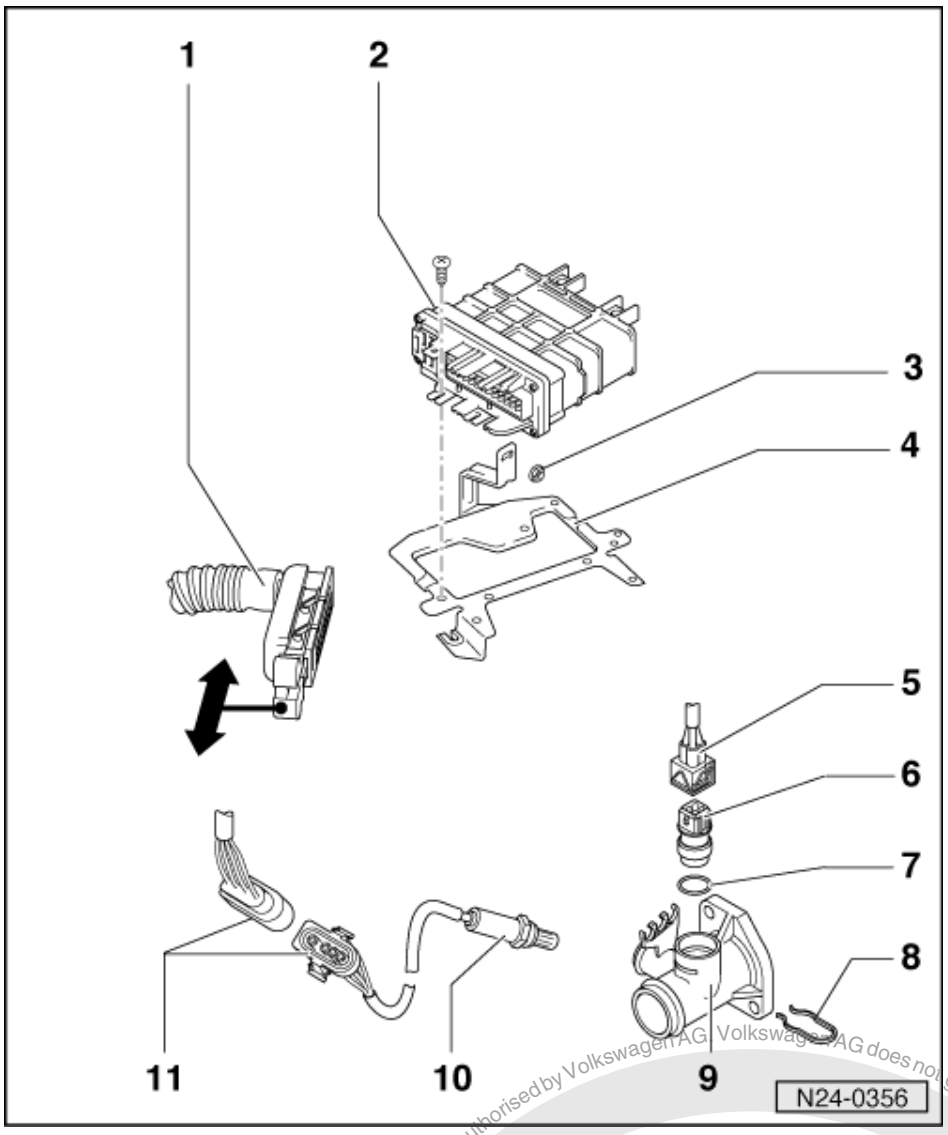

3 10 Nm
4 Retainer
- For control unit

5 Connector
- 4 pin

6 Coolant temperature sender (G62)*
- With coolant temperature gauge sender (G2)
- If necessary before removing, release pressure from cooling system
- Checking =>Page 45
- Resistance graph =>Page 31 , Fig. 1

7 O ring
- Renew if damaged

8 Retaining clip
9 Connection

Protected by copyright. Copying for private or commercial purposes, in part or in whole, is not permitted unless authorised by Volkswagen AG. Volkswagen AG does not guarantee or accept any liability with respect to the correctness of information in this document. Copyright by Volkswagen AG.
satelettronica

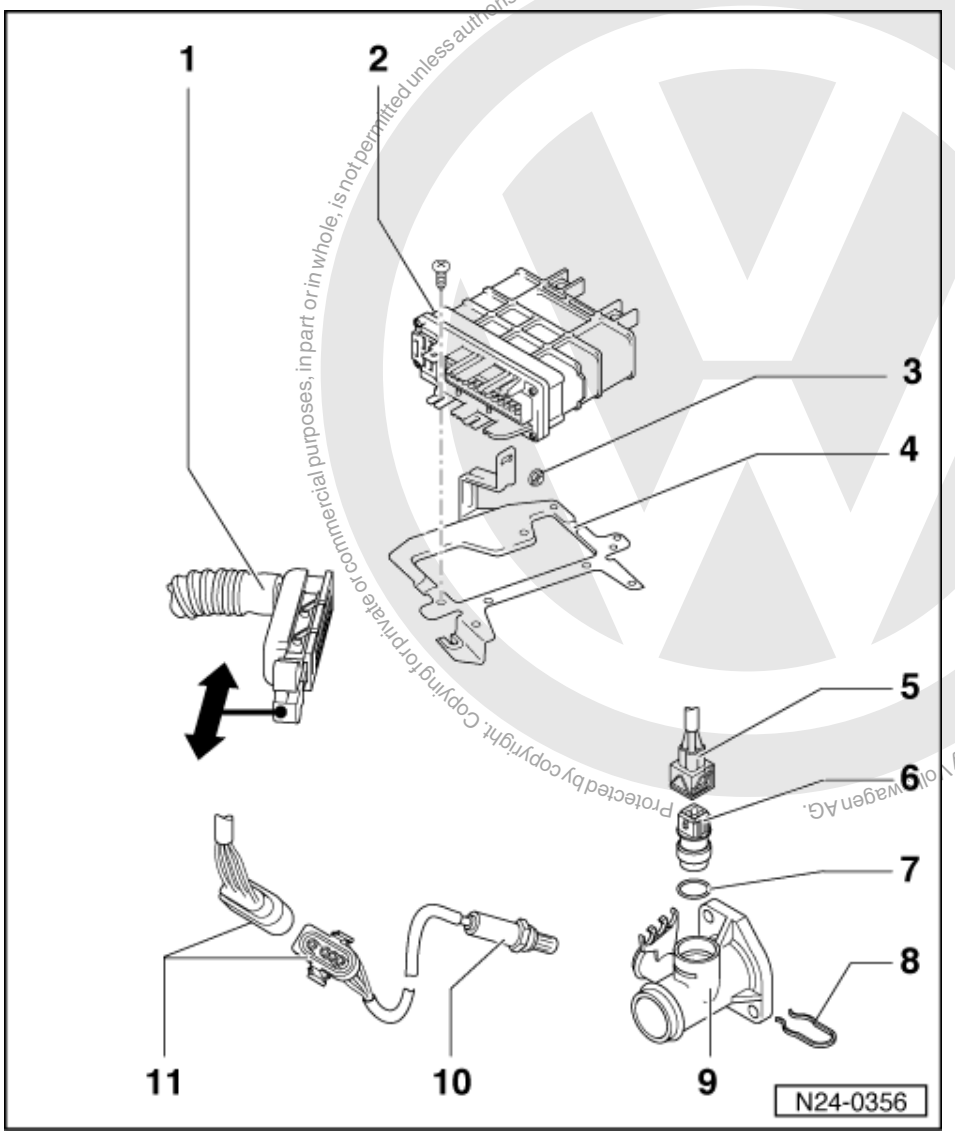

10 Lambda probe (G39)*, 50 Nm

- Location: in exhaust manifold
- Grease only the threads with "G5"; "G5" must not get into the slots on the probe body
- Checking Lambda probe and Lambda control
  => Page 33
- Checking probe heating voltage supply => Page 35
- Check probe heating for continuity

11 Connector

- 4 pin
- For Lambda probe and probe heating

Protected by copyright. Copying for private or commercial purposes, in part or in whole, is not permitted unless authorised by Volkswagen AG. Volkswagen AG does not guarantee or accept any liability with respect to the correctness of information in this document. Copyright by Volkswagen AG.
satelettronica

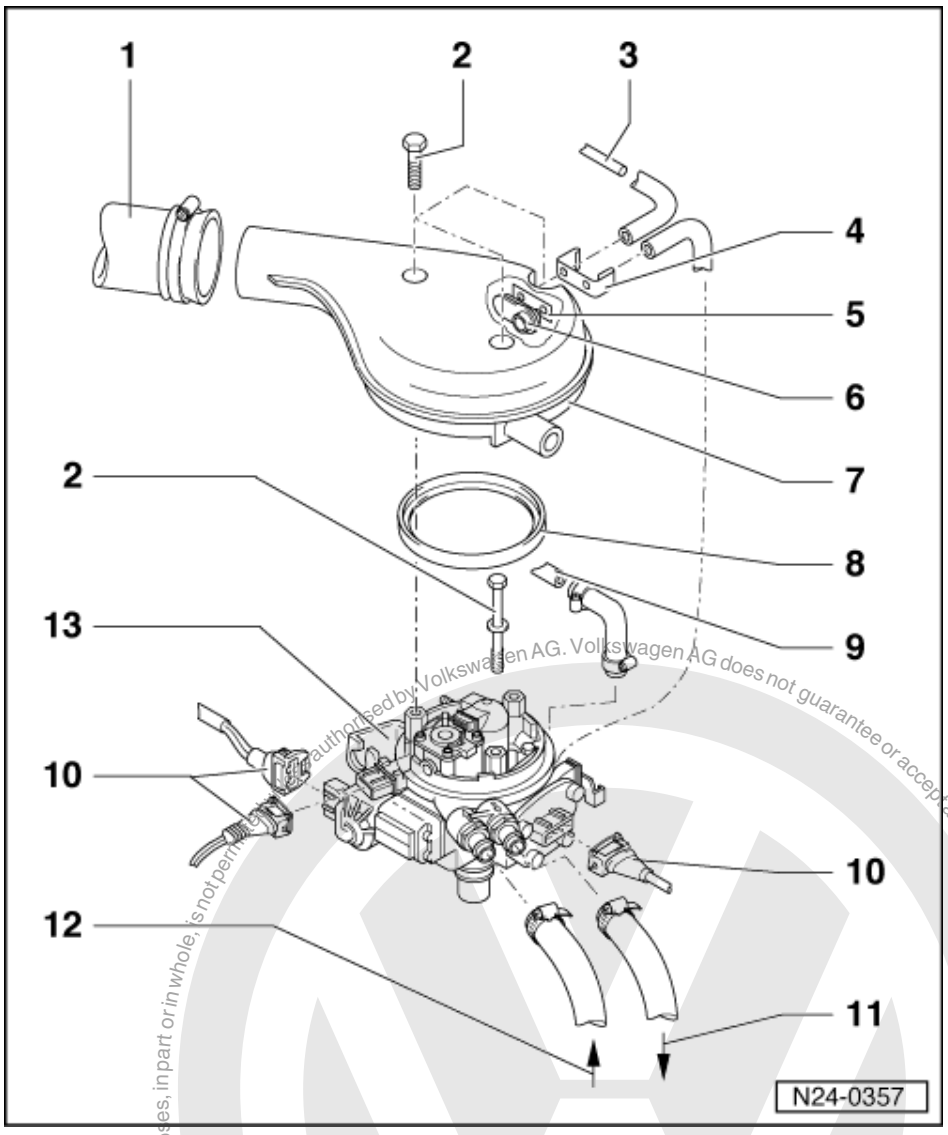

Part II

1 Intake hose
- To air cleaner

2 10 Nm

3 To vacuum unit on air cleaner

4 Retainer

5 Seal
- Renew if damaged

6 Temperature regulator
- For intake air preheating
- Checking intake air preheating =>Page 62

7 Intake elbow

8 Oil seal
- Renew if damaged

Protected by copyright. Copying for private or commercial purposes, in part or in whole, is not permitted unless authorised by Volkswagen AG. Volkswagen AG does not guarantee or accept any liability with respect to the correctness of information in this document. Copyright by Volkswagen AG.
satelettronica

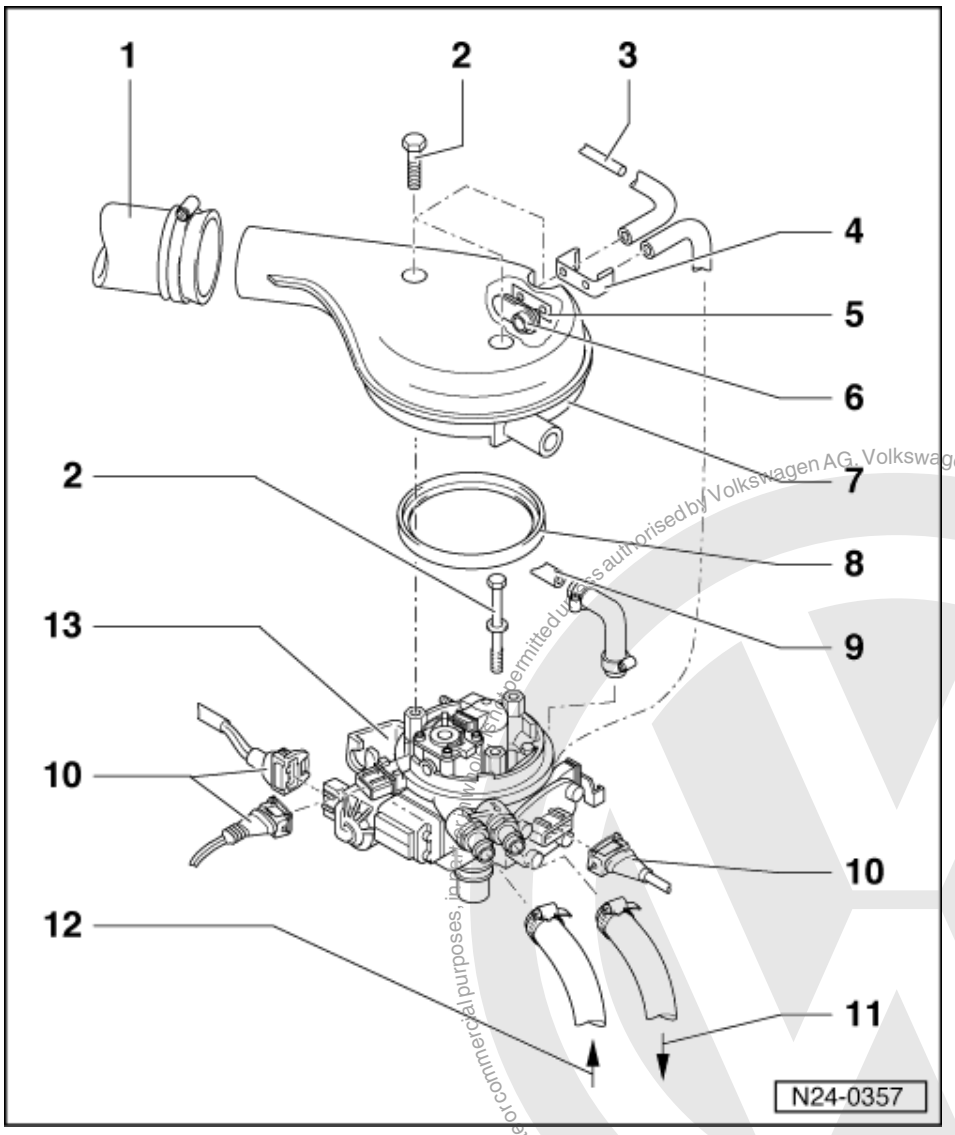

9 To activated charcoal filter solenoid valve 1 (N80)
- => Page 17 , item 17
- Activated charcoal filter system

=> Repair group 20, removing and installing parts of the fuel supply system, removing and installing parts of the activated charcoal filter system

10 Connector
11 Return pipe
12 Supply pipe
13 Injection unit
- Servicing => Page 26

Protected by copyright. Copying for private or commercial purposes, in part or in whole, is not permitted unless authorised by Volkswagen AG. Volkswagen AG does not guarantee or accept any liability with respect to the correctness of information in this document. Copyright by Volkswagen AG.
satelettronica

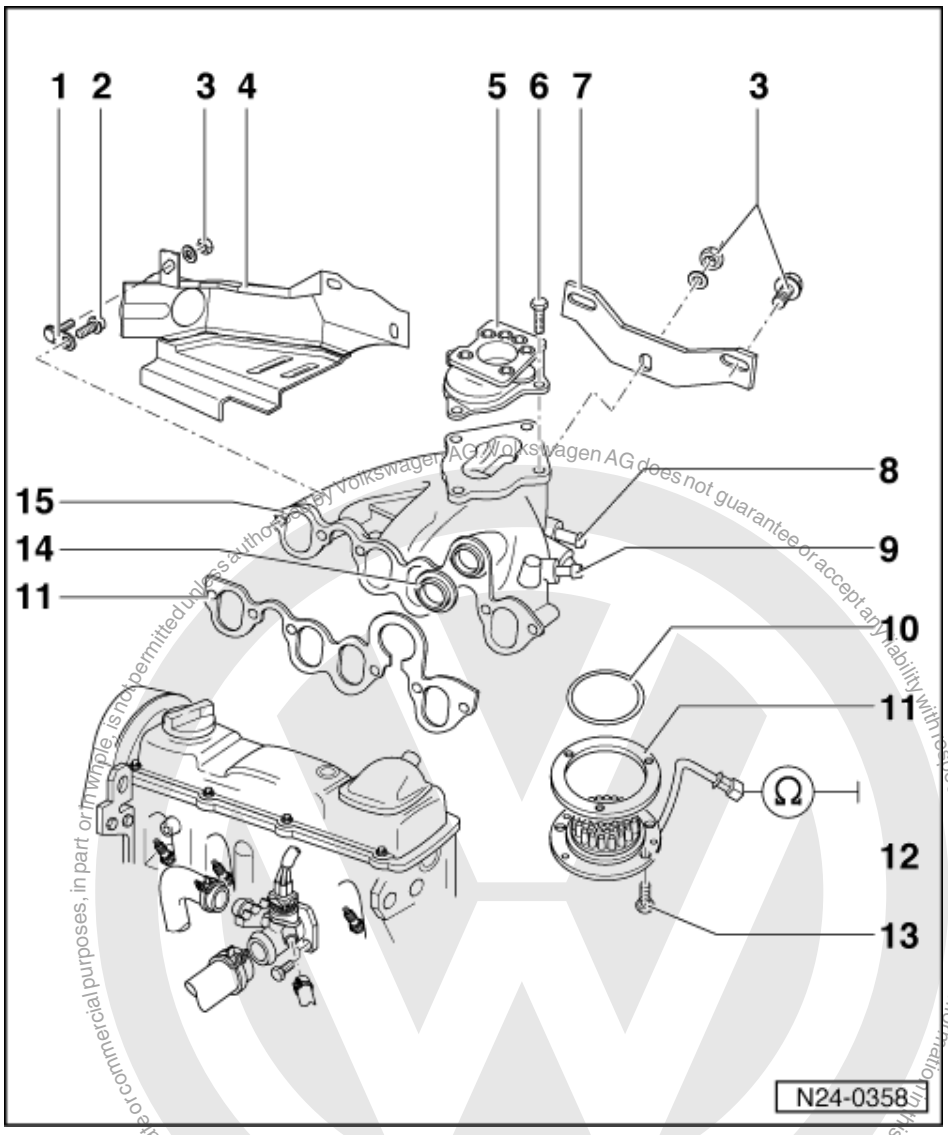

Part III

1 Bracket
- For warm air collector plate

2 25 Nm

3 20 Nm

4 Warm air collector plate

5 Flange
- Check for cracks and distortion

6 13 Nm
- Secure bolt under throttle valve lever with a locking plate.

7 Support
- For intake manifold

Protected by copyright. Copying for private or commercial purposes, in part or in whole, is not permitted unless authorised by Volkswagen AG. Volkswagen AG does not guarantee or accept any liability with respect to the correctness of information in this document. Copyright by Volkswagen AG.
satelettronica

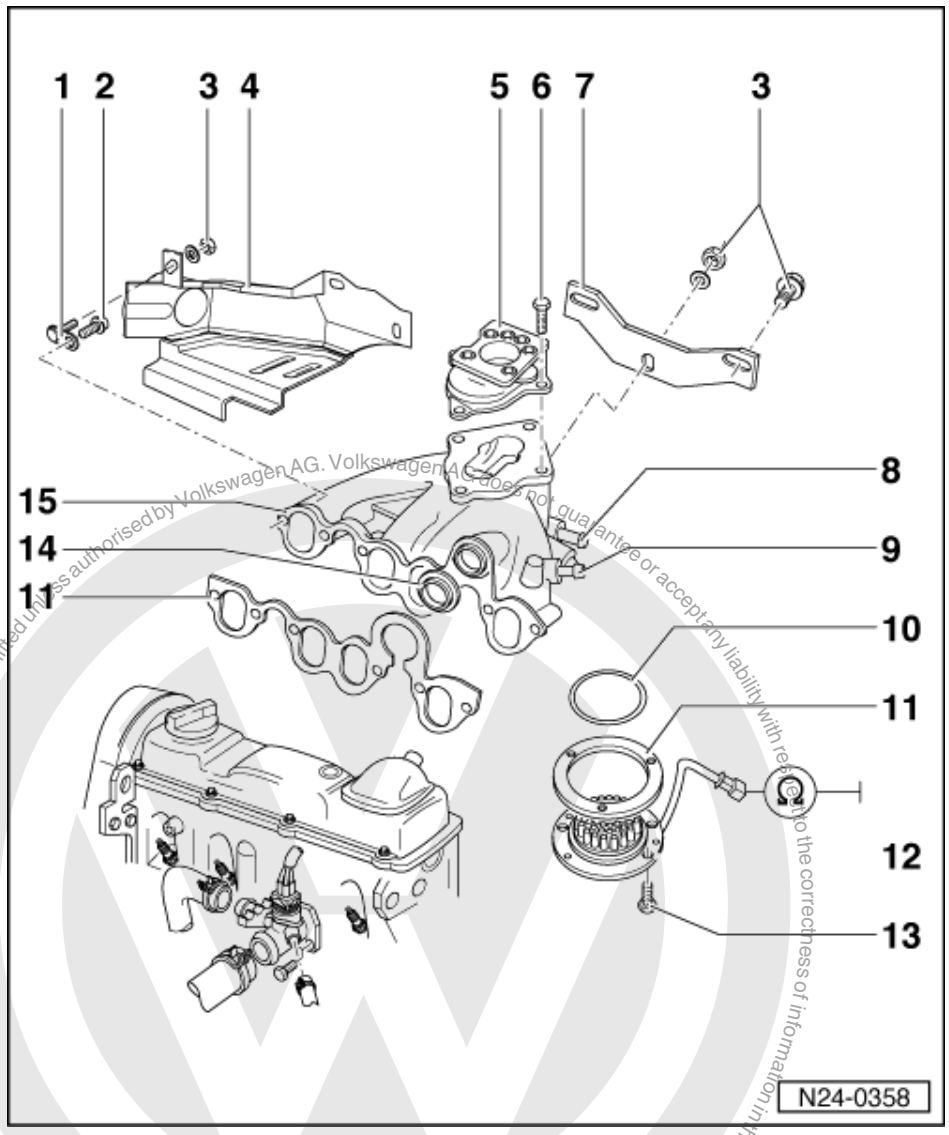

8 To coolant pipe
9 Vacuum connection
- To brake servo

10 O ring
- Renew if damaged

11 Seal
- Renew

12 Intake air preheater (N51)
- Test prerequisites: engine cold
- Resistance between plug and earth (-): 0.25...0.50 ω
- Checking activation
  => Page 8 , Final control diagnosis

13 10 Nm
14 Oil seal
15 Intake manifold

Protected by copyright. Copyright by Volkswagen AG.
Copyrightby Volkswagen AG. Volkswagen AG does not guarantee or accept any liability with respect to the correctness of information in this document. Copying for private or commercial purposes, in part or in whole, is not permitted unless authorised by Volkswagen AG.
satelettronica

1.4 - Servicing injection unit

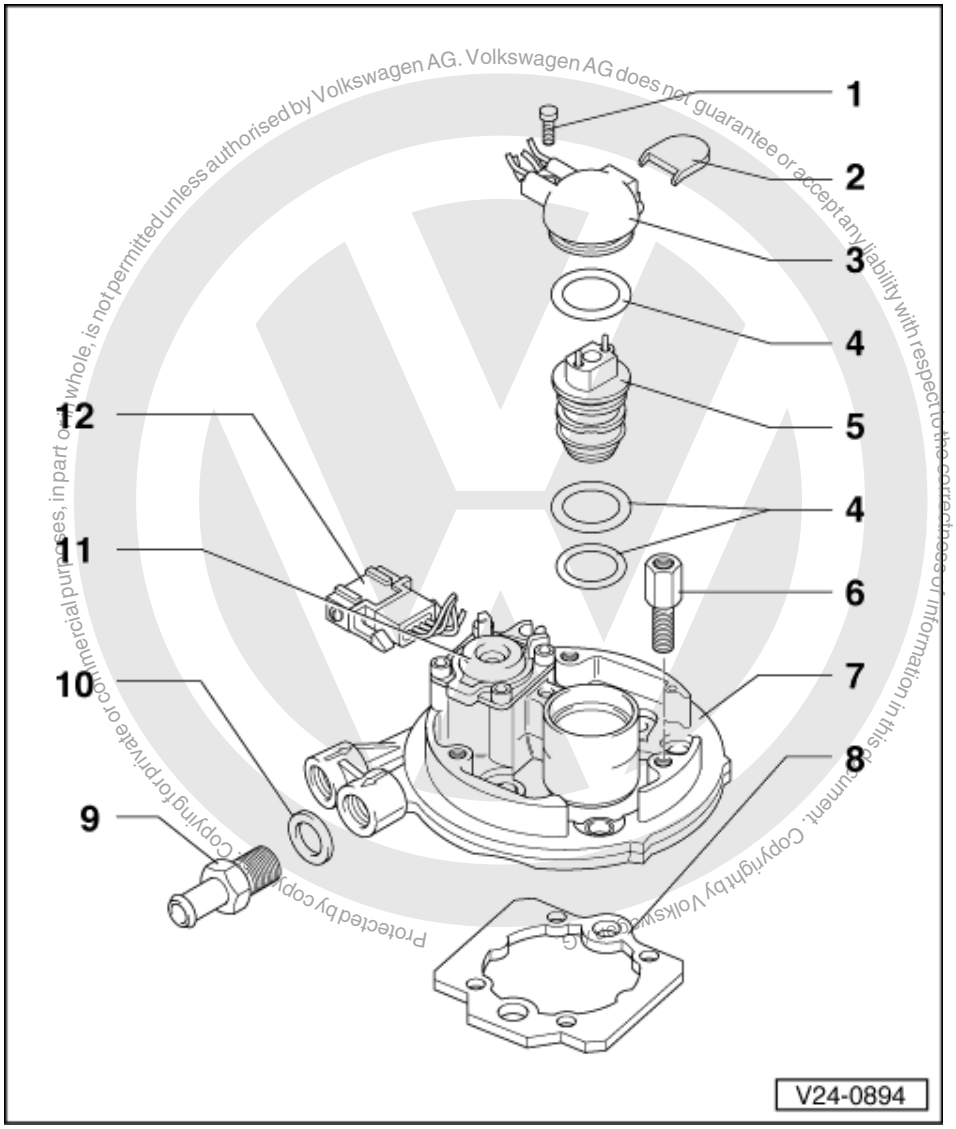

Protected by copyright. Copyright by Volkswagen AG. Volkswagen AG does not guarantee or accept any liability with respect to the correctness of information in this document. Copying for private or commercial purposes, in part or whole, is not permitted unless authorised by Volkswagen AG.

satelettronica

Servicing upper part

1 5 Nm
- Install with D6

2 Protective cap
- Only on replacement part for transportation protection of intake air temperature sender, must be removed after installation

3 Retainer for injector with intake air temperature sender (G42)*
- Checking intake air temperature sender =>Page 48
- Resistance graph
  =>Page 31 , Fig. 1

4 O ring
- Renew

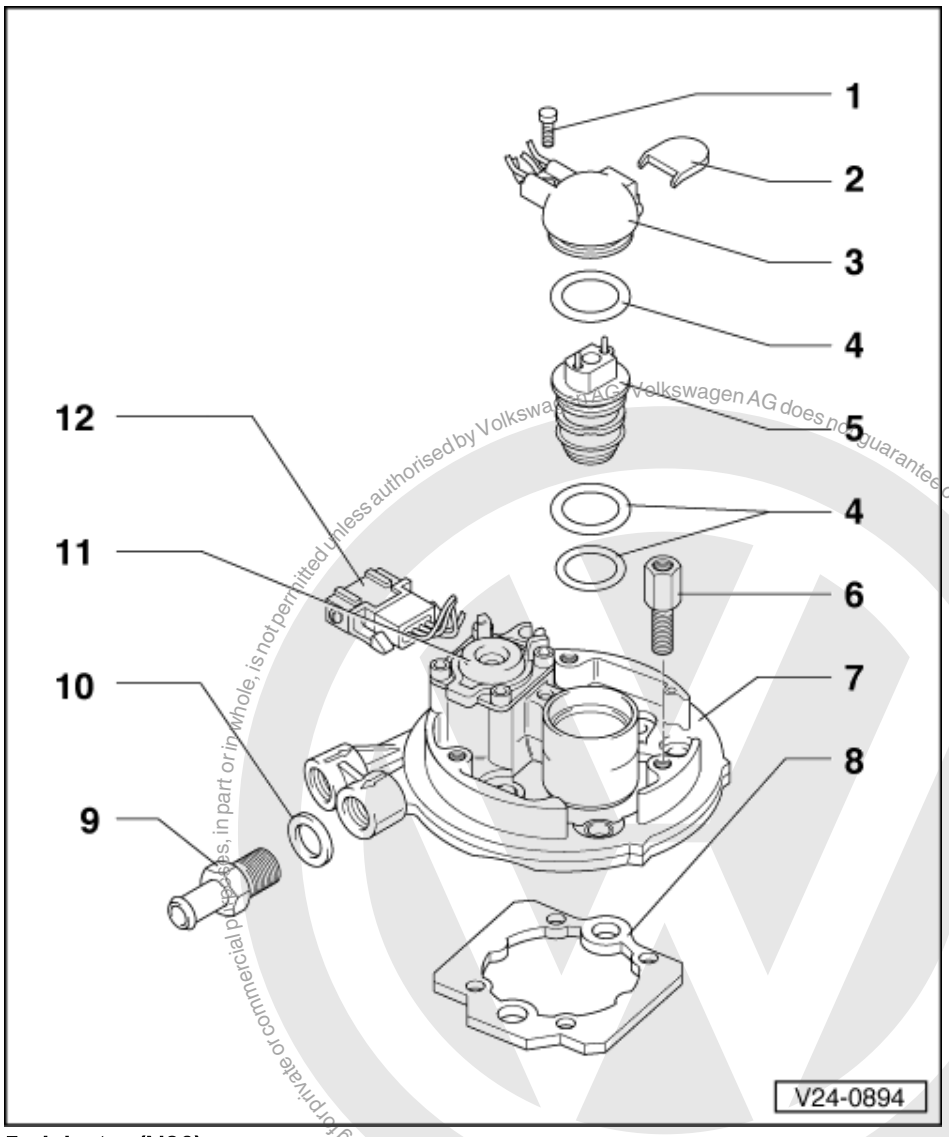

5 Injector (N30)
- Checking =>Page 50

6 6 Nm
- Install with D6

7 Injection unit upper part
- Note fitting position

8 Seal
- Note fitting position
- Renew if damaged

9 Connection

10 Seal
- Renew

11 Fuel pressure regulator
- Checking fuel pressure regulator and holding pressure => Page 59

12 Plug
- Release retainers to remove

Protected by copyright. Copying for private or commercial purposes, in part or in whole, is not permitted unless authorised by Volkswagen AG. Volkswagen AG does not guarantee or accept any liability with respect to the correctness of information in this document. Copyright by Volkswagen AG.
satelettronica

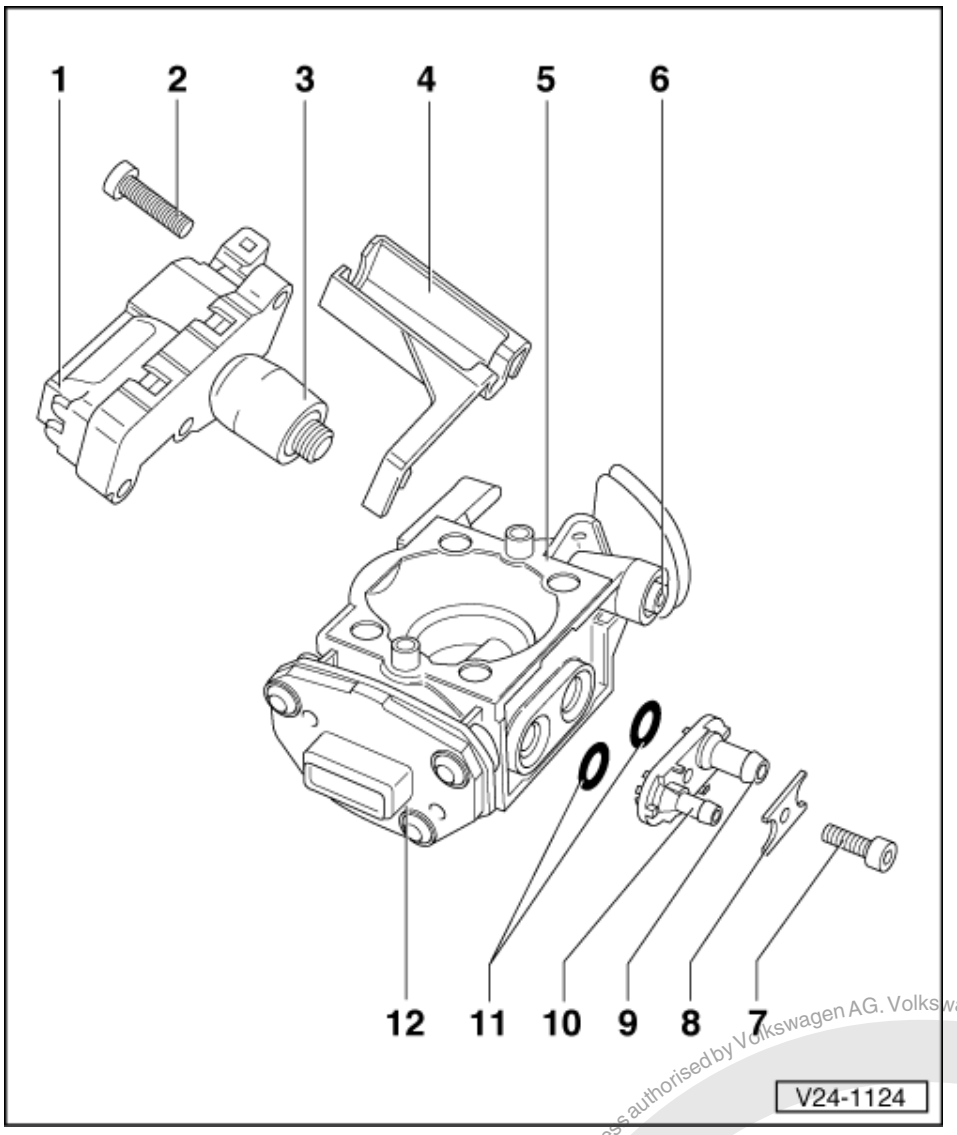

Servicing lower part

1 Throttle valve positioner (V60)*/**
- With idling switch (F60)*
- Checking =>Page 37
- When installing ensure that idling switch can only be operated via switch plastic plate with stop screw. If necessary loosen bracket -4- and align.
- Check idling after renewing the idling switch =>Page 38
- With throttle valve positioner sender (G127)*; Checking sender =>Page 42

2 6 Nm

Protected by copyright. Copying for private or commercial purposes, in part or in whole, is not permitted unless authorised by Volkswagen AG. Volkswagen AG does not guarantee or accept any liability with respect to the correctness of information in this document. Copyright by Volkswagen AG.
satelettronica

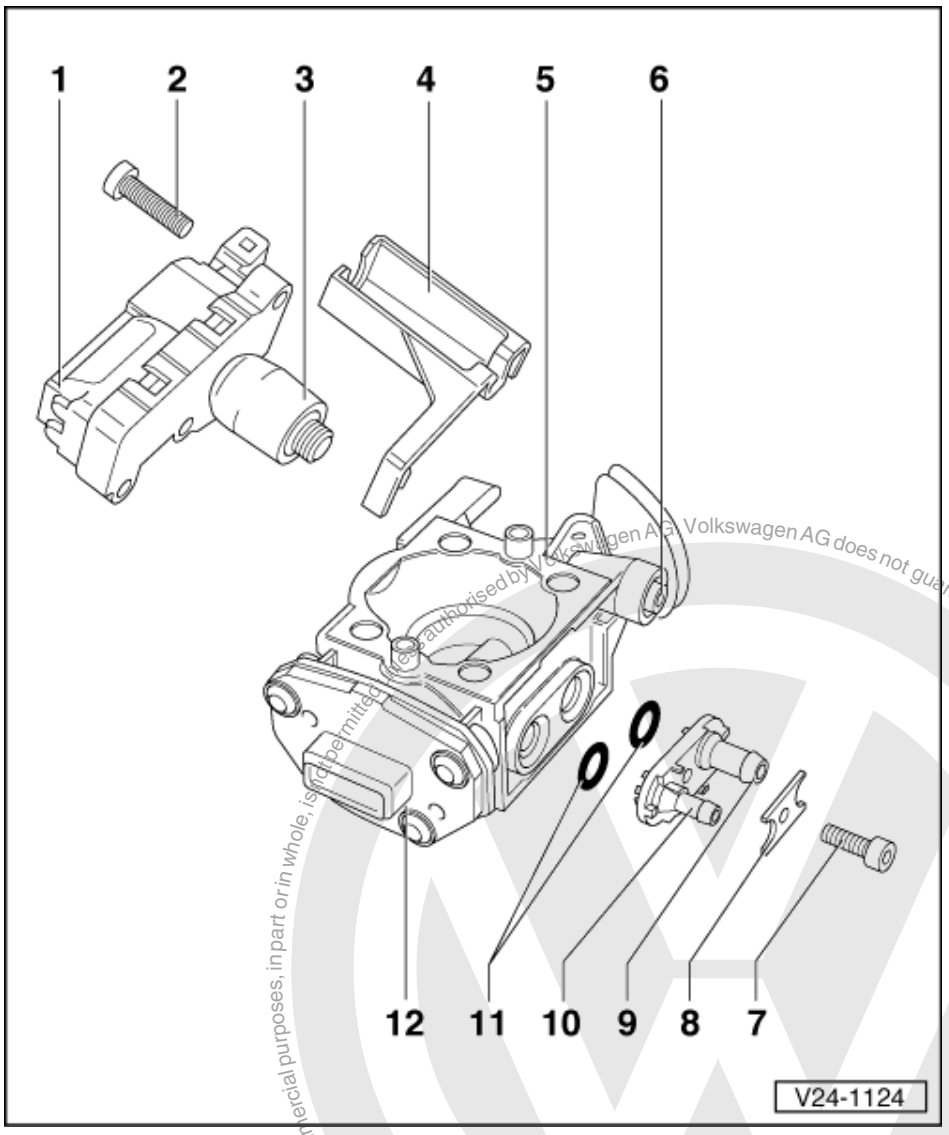

3 Idling switch (F60)
- Checking and adjusting
  =>Page 38
- Renewing: Renew throttle valve positioner

4 Support bracket
- For accelerator cable
- Adjusting accelerator cable

=> Repair group 20; Removing and installing parts of the fuel supply system; Adjusting accelerator cable Removing and installing parts of the fuel supply system Adjusting accelerator cable

5 Injection unit lower part

6 Limiting screw
- The screw is sealed at the factory and must not be moved!

7 3 Nm

8 Retainer

Copyright by Volkswagen AG. Volkswagen AG does not guarantee or accept any liability with respect to the correctness of information in this document. Copyright by Volkswagen AG. Copying for private or commercial purposes, in part or in whole, is not permitted unless authorised by Volkswagen AG. Volkswagen AG does not guarantee or accept any liability with respect to the correctness of information in this document.
satelettronica

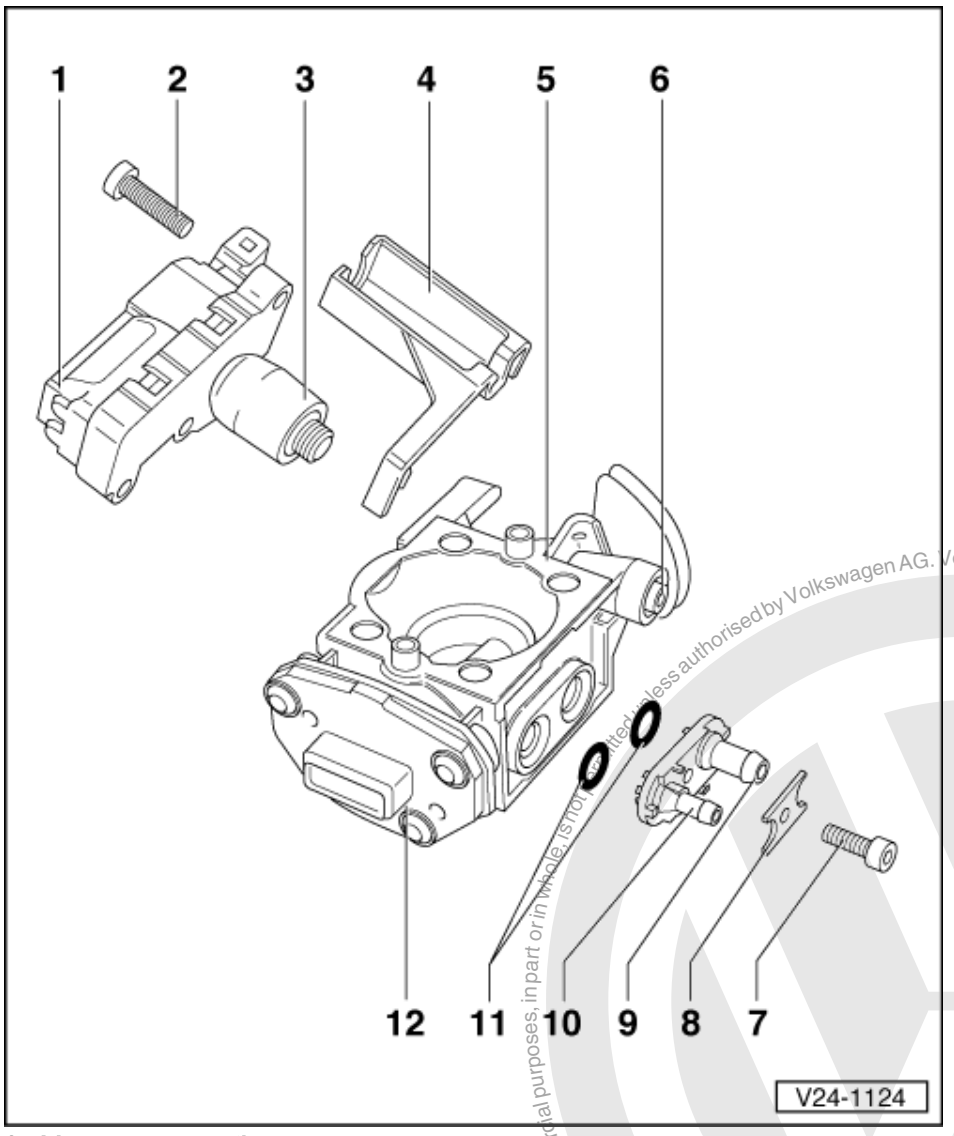

9 Vacuum connection
- For activated charcoal filter system

=> Repair Group 20; Removing and installing parts of fuel supply system; Removing and installing parts of activated charcoal filter system Removing and installing parts of fuel supply system Removing and installing parts of activated charcoal filter system

10 Vacuum connection
- For intake air preheating

11 O ring
- Renew if damaged

12 Throttle valve potentiometer (G69)*
- Checking =>Page 43
- Must not be adjusted
- If defective: renew injection unit lower part
- Contacts gold plated
- Only automatic gearbox:
  After replacing the injection part the automatic gearbox control unit (J217) and the throttle valve potentiometer (G69) must be matched to one another
  => Page 56
- Manual gearbox: 5 pin

Protected by copyright. Copying for private or commercial purposes, in part or in whole, is not permitted unless authorised by Volkswagen AG. Volkswagen AG does not guarantee or accept any liability with respect to the correctness of information in this document. Copyright by Volkswagen AG.
satelettronica

- Automatic gearbox: 7 pin

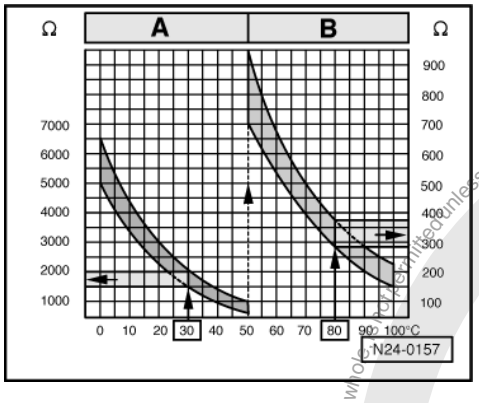

-> Fig. 1 Resistance graph

The diagram is valid for coolant temperature sender (G62) and intake air sender (G42).

Scale A shows resistance values for temperature range 0...50 °C and scale B the values for temperature range 50...100 °C.

Examples:

- 30 °C corresponds to a resistance from 1500...2000 ω
- 80 °C corresponds to a resistance from 275...375 ω

1.5 - Safety precautions

Warning!
Fuel system is under pressure! Before opening the system place a cloth around the connection. Then release pressure by carefully loosening the connection.

To prevent injuries to persons and/or damage to the fuel injection and ignition system, the following must be noted:

- Do not touch or disconnect ignition wiring when the engine is running or being turned at starter speed.
- The ignition must be switched off before connecting or disconnecting injection or ignition system wiring or tester cables.
- If the engine is to be turned at starter speed, without starting, e.g. when checking compressions, pull plug off Hall sender (distributor).

1.6 - Rules for cleanliness

When working on the fuel supply/injection system, pay careful attention to the following "5 rules":

- Thoroughly clean all unions and the adjacent areas before disconnecting.
- Place parts that have been removed on a clean surface and cover. Do not use fluffy cloths!
- Carefully cover opened components or seal, if the repair cannot be carried out immediately.
- Only install clean components:
  Only unpack replacement parts immediately prior to installation.
  Do not use parts that have been stored loose (e.g. in tool boxes etc.).
- When the system is open:
  Do not work with compressed air if this can be avoided.

Protected by copyright. Copying for private or commercial purposes, in part or in whole, is not permitted unless authorised by Volkswagen AG. Volkswagen AG does not guarantee or accept any liability with respect to the correctness of information in this document. Copyright by Volkswagen AG.
satelettronica

Do not move vehicle unless absolutely necessary.

1.7 - Technical data

Engine code		1F	ADZ
Idling test2)			
Idling speed	rpm	700...10001)	775...9751)
Mono Motronic control unit			
Part No.		Parts microfiche	Parts microfiche
Governed speed	rpm	approx. 6300	approx. 6300

1) Up-to-date specifications:

=> Exhaust emissions test binder

2) Idling speed is not adjustable, observe test conditions => Page 32

1.8 - Idling speed check

Notes:

- Idling speed not adjustable.
- CO content regulated by Lambda regulation. Faults in Lambda control are detected in self-diagnosis and stored in fault memory.

Special tools, testers and auxiliary items

- Ignition tester V.A.G 1767 or V.A.G 1367 with HT pick-up clamp V.A.G 1367/8

Test conditions

- No faults stored in fault memory
  => Page 3 , interrogating fault memory
- Accelerator cable adjustment OK

=> Repair group 20; Removing and installing parts of fuel supply system; Adjusting throttle cable Removing and installing parts of fuel supply system Adjusting throttle cable

- Exhaust system must be free of leaks
- Engine oil temperature min. 80 °C
- Electrical consumers switched off (radiator fan must not run during the check)
- Air conditioner switched off
- Ignition timing OK., checking
  => Page 69

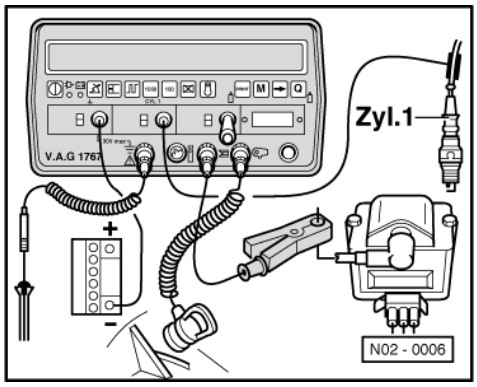

Volkswagen AG. Volkswagen AG does not guarantee or accept any liability with respect to the correctness of information in this document. Copyright by Volkswagen AG. Protected by copyright. Copying for private or commercial purposes, in part or in whole, is not permitted unless authorised by Volkswagen AG.
satelettronica

Test sequence

- -> Connect ignition tester V.A.G 1767 or ignition tester V.A.G 1367 with HT pick-up clamp V.A.G 1367/8.
- Start engine and run at idling speed.

- Check idling speed.
  Specification:
  1F: 700...1000 rpm1)
  ADZ: 775...975 rpm1)

  1) Up-to-date specifications:

=> Exhaust emissions test binder

If the specification is not attained:

- Check throttle valve positioner => Page 37

1.9 - Checking Lambda probe and Lambda control

Special tools, testers and auxiliary items

- Fault reader V.A.G 1551 or vehicle system tester V.A.G 1552 with cable V.A.G 1551/3
- Test box V.A.G 1598/18
- Hand multimeter V.A.G 1526 or multimeter V.A.G 1715
- Adapter set V.A.G 1594
- Current flow diagram

Check conditions

- Coolant temperature at least 85 °C
- Exhaust system between catalyst and cylinder head free of leaks

Functional check of Lambda probe

- Connect fault reader V.A.G 1551 (V.A.G 1552) and select engine electronics control unit (address word 01); carry out selection at idling.
  => Page 2

-> Indicated on display:

```
Rapid data transfer      HELP
Select function XX
```

- Input 08 for "Read measured value block" function and confirm with Q.

-> Indicated on display:

```
Read measured value block      HELP
Input display group number XX
```

- Input 00 for "Display group number" and confirm with Q.

-> Indicated on display:
(1...10 = Display zones)

```
Read measured value block      0
     1     2     3     4     5     6
7     8     9     10
```

- Note reading in display zone 1 (coolant temperature),
  Specification: max. 22 (corresponds to at least 85 °C)
  if necessary, run engine until temperature reached.
- Note reading in display zone 5 (Lambda reading).
  Specification: varying between 106...150

Protected by copyright. Copying for private or commercial purposes, in part or in whole, is not permitted unless authorised by Volkswagen AG. Volkswagen AG does not guarantee or accept any liability with respect to the correctness of information in this document. Copyright by Volkswagen AG.
satelettronica

- Note reading in display zone 6 (altitude correction).

Altitude of workshop	Specification
0 m	241...255 or 0...30
250 m	235...255 or 2...24
500 m	228...255 or 0...17
750 m	222...255 or 0...11
1000 m	215...255 or 0...4
1250 m	209...254
1500 m	202...247
1750 m	195...240
2000 m	188...233
2250 m	182...227
2750 m	168...213
3000 m	162...207

If specification attained:

- Press ⇒ key.
- Input 06 for "End output" and confirm with Q.

If specification not attained or exceeded:

- Check Lambda probe heating => Page 35 .
- Check intake air system for leaks (unmetered air). To do this, leave fault reader in this setting and allow engine to continue running
  => Page 61
- Check spark plugs, spark plug connectors, ignition cables.

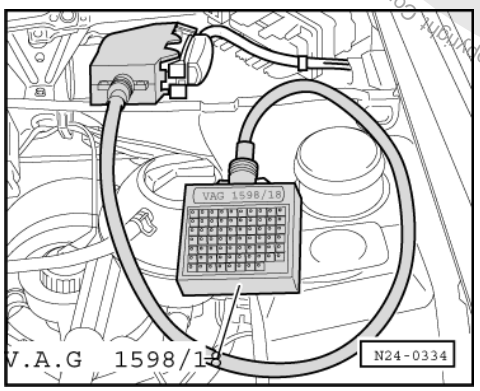

- Check activated charcoal filter solenoid valve -1- for leaks. The valve must always be closed when the ignition is switched off.
- Check Lambda probe for soot. Renew if necessary.

Checking Lambda probe wiring

- Switch off ignition
- -> Connect test box V.A.G 1598/18 to control unit wiring loom.

Protected by copyright. Copyright by Volkswagen AG. Volkswagen AG does not guarantee or accept any liability with respect to the correctness of information in this document. Copyright by Volkswagen AG. Reproduction, in part or in whole, is not permitted unless authorised by Volkswagen AG. For commercial purposes or publication, copyright owner must be contacted.
satelettronica

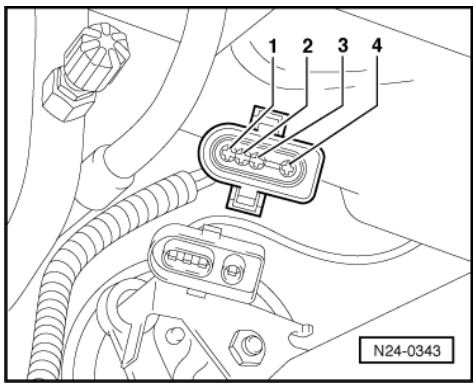

- -> Separate 4 pin connector to Lambda probe -1-.
- Check wiring between test box and 4 pin connector for open circuit according to current flow diagram.
  Contact 3+socket 15
  Contact 4+socket 38
  Wire resistance: Max. 1.5 ω
- Check wiring at 4 pin connector for short to one another.
  Specification: ∞ω

If the specifications are not attained:

- Check wiring according to current flow diagram.

1.10 - Checking Lambda probe heating

Special tools, testers and auxiliary items

- Test box V.A.G 1598/18
- Hand multimeter V.A.G 1526 or multimeter V.A.G 1715
- Adapter set V.A.G 1594
- Current flow diagram

Check conditions

- Fuse 18 OK.
- Fuel pump relay OK

Checking voltage supply

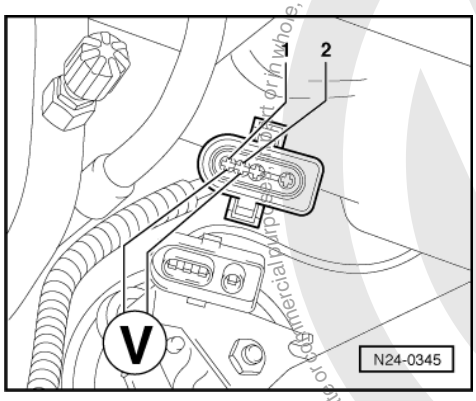

- -> Separate 4 pin connector to Lambda probe.
- Connect multimeter to measure voltage at contacts 1+2 of connector.
- Start engine.
  Specification: Min. 11 V
- Switch off ignition

Protected by copyright. Copying for private or commercial purposes, in part or in whole, is not permitted unless authorised by Volkswagen AG. Volkswagen AG does not guarantee or accept any liability with respect to the correctness of information in this document. Copyright by Volkswagen AG.
satelettronica

If no voltage is present:

- Check wiring to relay plate according to current flow diagram.

1.11 - Checking engine operating mode

Note:

Check establishes whether Mono Motronic control unit (J257) recognises the engine operating modes (idling, part throttle, acceleration/full throttle enrichment, full throttle and overrun).

Special tools, testers and auxiliary items

- Fault reader V.A.G 1551 or vehicle system tester V.A.G 1552 with cable V.A.G 1551/3

Test conditions

- Coolant temperature at least 80 °C

Test sequence

- Connect fault reader V.A.G 1551 (V.A.G 1552) and select engine electronics control unit (address word 01); carry out selection at idling.
  => Page 2

-> Indicated on display:

```
Rapid data transfer      HELP
Select function XX
```

- Input 08 for "Read measured value block" function and confirm with Q.

-> Indicated on display:

```
Read measured value block      HELP
Input display group number XX
```

- Enter 04 for "Display group number" and confirm with Q.

-> Indicated on display:
(1...4 = Display zones)

```
Read measured value block      4
     1     2     3     4
```

- Observe display zone 4 -8 digit number block-:

Display in operating mode

- Idling:

  2nd position from right must display 1
  Display: 00000010

- Part throttle:

- Rev up evenly.

  3rd position from right must display 1
  Display:: 00000100

- Acceleration/full throttle enrichment:

Protected by copyright. Copying for private or commercial purposes, in part or in whole, is not permitted unless authorised by Volkswagen AG. Volkswagen AG does not guarantee or accept any liability with respect to the correctness of information in this document. Copyright by Volkswagen AG.
satelettronica

- Quickly open throttle valve slightly.

  5th position from right must display 1
  Display: 00010100

◆ Full throttle:

- Floor accelerator pedal and release.

  4th position from left must briefly display 1
  Display: 00011000

◆ Overrun mode:

- Raise engine speed to above 3000 rpm.
- Close throttle abruptly.

  As long as the engine speed is above 1500 rpm 1st position from left must display 1
  Display: 00000011 (briefly)

Note:
Below 1500 rpm idling speed is again recognised.
- Press ⇒ key.
- Input 06 for "End output" and confirm with Q.

If the specifications are not attained:
- Interrogate fault memory. Eliminate faults if necessary => Page 3 .
- Check throttle valve potentiometer => Page 43 .
- Check idling switch => Page 38 .

1.12 - Checking throttle valve positioner

Checking function
Functional check => Page 8 , Final control diagnosis
Checking activation
Special tools, testers and auxiliary items
- Hand multimeter V.A.G 1526 or multimeter V.A.G 1715
- Diode test lamp V.A.G 1527
- Adapter set V.A.G 1594
- Current flow diagram

Test conditions
- Fault reader V.A.G 1551 (V.A.G 1552) connected
- Ignition switched off

Test sequence

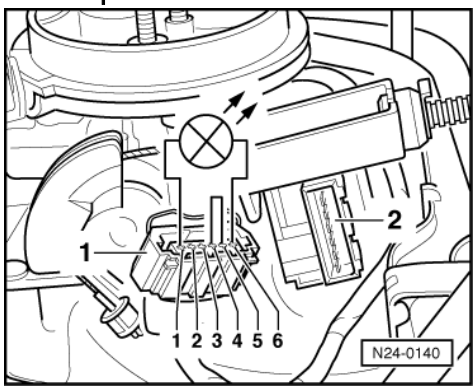

Protected by copyright. Copying for private or commercial purposes, in part or in whole, is not permitted unless authorised by Volkswagen AG. Volkswagen AG does not guarantee or accept any liability with respect to the correctness of information in this document. Copyright by Volkswagen AG.
satelettronica

- -> Pull plug -1- off throttle valve positioner (V60) -2- .
- Connect diode test lamp V.A.G 1527 with aux. cables from V.A.G 1594 to contacts 1+6 of the connector.
- Bridge contacts 4+5 with aux. cables from V.A.G 1594.
- Switch on ignition and again perform self-diagnosis until the throttle valve positioner is activated.
  LED must light up.
- Slightly open throttle valve and close again.
  Both LEDs must light up alternately.

Note:

If the throttle valve is opened too far, separate aux. cables to the contacts 4 + 5, reconnect and repeat check.

- Carry out final control diagnosis up to end.
- Switch off ignition and connect plug.
- Interrogate fault memory=> Page 3 .

Checking resistance

Test conditions

- Ignition switched off.

Test sequence

- Remove air intake elbow.

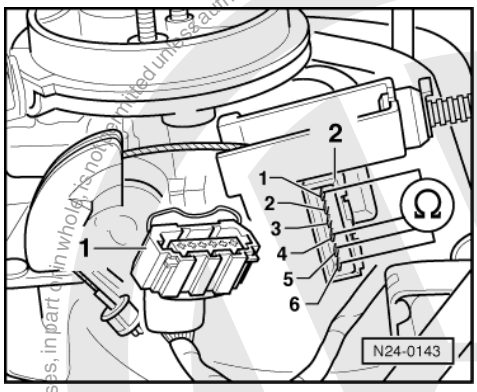

- -> Pull connector -1- off throttle valve positioner -2-.
- Check resistance with hand multimeter V.A.G 1526 and aux. cables from V.A.G 1594 at contacts of throttle valve positioner as follows:
  Specifications:
  between contacts 1+6 = 3...200 ω
  between contacts 4+5
  Throttle valve closed = max. 200 ω
  Throttle valve open =∞ ω

If the specifications between contacts 4+5 are not attained:

- Check idling switch => Page 38 .

1.13 - Checking and adjusting idling switch

Special tools, testers and auxiliary items

- Fault reader V.A.G 1551 or vehicle system tester V.A.G 1552 with cable V.A.G 1551/3
- Hand multimeter V.A.G 1526 or multimeter V.A.G 1715
- Test box V.A.G 1598/18
- Adapter set V.A.G 1594

Protected by copyright. Copyright by Volkswagen AG. Volkswagen AG does not guarantee or accept any liability with respect to the correctness of information in this document. Copyright by Volkswagen AG. Reproduction, distribution and disclosure to third parties, in part or in whole, is not permitted unless authorised by Volkswagen AG.
satelettronica

- Current flow diagram

Notes:

- The adjustment is only necessary if the throttle valve positioner or the injection unit lower part is replaced.
- The idling switch (F60) can only be adjusted if the throttle valve positioner is fully out.

Checking function

- Connect fault reader V.A.G 1551 (V.A.G 1552) and select engine electronics control unit (address word 01); carry out selection with ignition switched on.
  => Page 2

-> Indicated on display:

```
Rapid data transfer      HELP
Select function XX
```

- Input 04 for "Initiate basic setting" and confirm with Q.

-> Indicated on display:

```
Basic setting      HELP
Input display group number XX
```

- Input 01 for "Display group number" and confirm with Q.

-> Indicated on display:
(1...4 = Display zones)

```
System in basic setting      1
     1      2      3      4
```

- Observe 2nd position from left in display zone 4 -8 digit number block-.
  Specification: 01000010
- Open throttle valve slightly. The display at 2nd position from left must jump to 0
  Display: 00000010

If the specifications are not attained:

- Remove air intake elbow.

Display	Cause	Continuation of check
Always 1	Short to earth	=> Page 39
Always 0	Open circuit or short to positive	=> Page 40

Continuation of check when display = always 1:

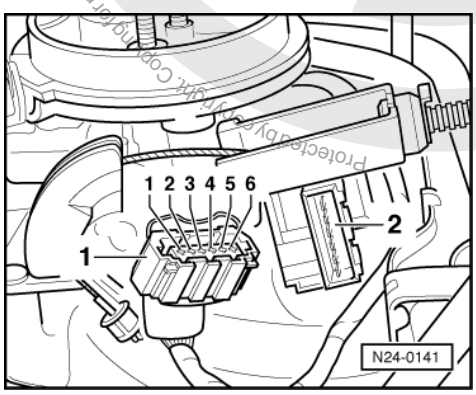

- -> Pull plug -1- off throttle valve positioner (V60) -2- .

Protected by copyright. Copyright by Volkswagen AG. Volkswagen AG does not authorised by Volkswagen AG. Volkswagen AG does not guarantee or accept any liability with respect to the correctness of information in this document. Copyright by Volkswagen AG.
satelettronica

Display 0:

- Replace throttle valve positioner (V60).

Display 1:

- Press ⇒ key.
- Input 06 for "End output" and confirm with Q.
- Switch off ignition
- Pull connector off Mono Motronic control unit.
- Check wiring to control unit at 6 pin connector contact 5 for short to wire contact 4 and to vehicle earth.

If no fault in wire is detected:

- Renew Mono Motronic control unit (J257)
  =>Page 19 , item 2 .

Continuation of check when display = always 0:

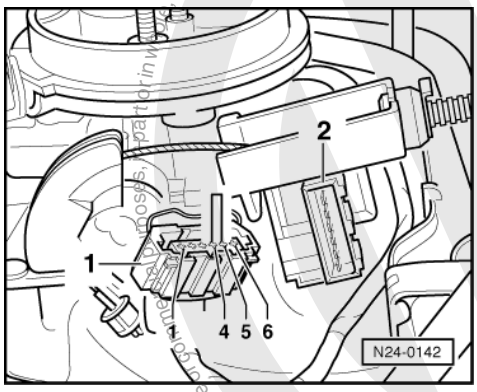

- -> Pull plug -1- off throttle valve positioner (V60) -2- .
- Bridge connector contacts 4+5 with aux. cables from V.A.G 1594 and observe display.

Display 1:

- Replace throttle valve positioner (V60).

Display 0:

- Press ⇒ key.

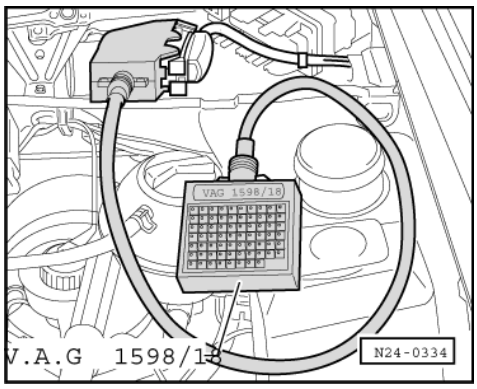

- Input 06 for "End output" and confirm with Q.
- Switch off ignition
- -> Connect test box V.A.G 1598/18 to control unit wiring loom.

- Check wiring between test box and 6 pin connector for open circuit according to current flow diagram.
  Contact 4+socket 20
  Contact 5+socket 10

Protected by copyright. Copying for private or commercial purposes is not permitted unless authorised by Volkswagen AG. Volkswagen AG does not guarantee or accept any liability with respect to the correctness of information in this document. Copyright by Volkswagen AG.
satelettronica

Wire resistance: Max. 1.5 ω

If no wiring fault is detected:

- Renew Mono Motronic control unit (J257)
  =>Page 19 , item 2 .

Checking adjustment

Note:

The adjustment of the idling switch must be performed in function "04 Basic setting" -positioner fully extended-. If the basic setting has to be exited for checking the wiring, the system must be brought back to basic setting with ignition switched on.

-> Indicated on display:
(1...4 = Display zones)

```
System in basic setting      1
     1      2      3      4
```

- Select display group 00, to do this
  - On V.A.G 1551 press key 1
  - On V.A.G 1552 press key ↓

-> Indicated on display:
(1...10 = Display zones)

```
System in basic setting 0
     1      2      3      4      5      6
7     8      9      10
```

- Observe displayed figure in display zone 2 (throttle valve potentiometer path 1):
  Specification: 196...200

If the specification is not obtained:

- Remove air intake elbow.

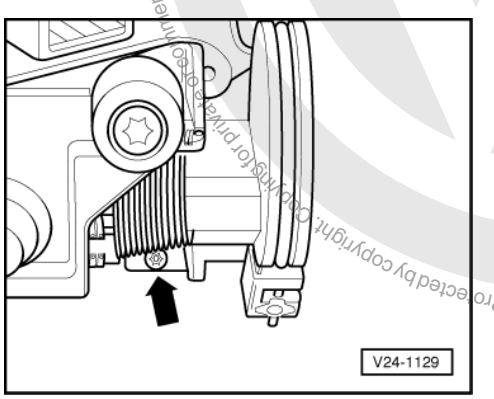

- -> Correct adjustment on the stop screw-arrow-.
  Setting value: 198±1

Note:

If during adjustment the throttle valve is opened to gain access to the screw, the control unit will move the throttle valve positioner back. To move the positioner fully out again, the function basic setting must be selected again.

If the stop screw adjustment has been corrected, the operation of the idling switch must be checked,=>Page 39

- Press ⇒ button. The throttle valve positioner must move in to its start point.

Protected by copyright. Copying for private or commercial purposes, in part or in whole, is not permitted unless authorised by Volkswagen AG. Volkswagen AG does not guarantee or accept any liability with respect to the correctness of information in this document. Copyright by Volkswagen AG.
satelettronica

- Input 06 for "End output" and confirm with Q.

If it is not possible to adjust to specification:

- Renew injection unit lower part.

1.14 - Checking sender for throttle valve positioner

Special tools, testers and auxiliary items

- Hand multimeter V.A.G 1526 or multimeter V.A.G 1715
- Diode test lamp V.A.G 1527
- Test box V.A.G 1598/18
- Adapter set V.A.G 1594
- Current flow diagram

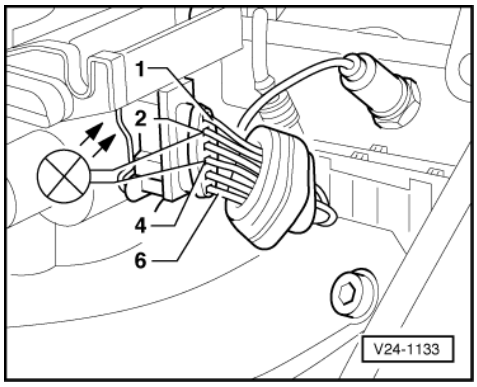

Test conditions

- Fuse 15 OK.

Test sequence

- Remove air intake elbow.
- -> Pull back rubber boot on throttle valve positioner (V60) plug.
- Connect diode test lamp V.A.G 1527 with aux. cables from V.A.G 1594 to contacts 2+4.
- Initiate final control diagnosis => Page 8
  When activating the throttle valve positioner the LED must flicker.

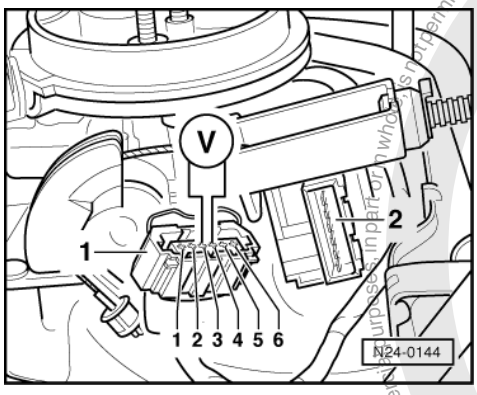

If the LED does not flicker:

- Input 06 for "End output" and confirm with Q.
- -> Pull connector -1- off throttle valve positioner -2-.

Protected by copyright. Copying for private or commercial purposes, in part or in whole, is not permitted unless authorised by Volkswagen AG. Volkswagen AG does not guarantee or accept any liability with respect to the correctness of information in this document. Copyright by Volkswagen AG.
satelettronica

- Connect multimeter with aux. cables from V.A.G 1594 to measure voltage at contacts 3+4 of connector.
  Specification: At least 11 V
- Switch off ignition

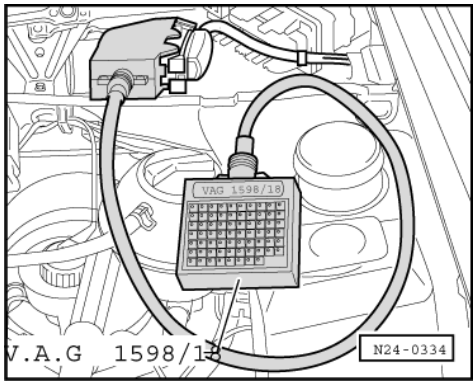

- -> Connect test box V.A.G 1598/18 to control unit wiring loom.
- Check wiring between test box and 6 pin connector for open circuit according to current flow diagram.
  Contact 2+socket 16
  Contact 4+socket 20
  Wire resistance: Max. 1.5 ω
- Additionally check wires for short to one another.
  Specification: ∞ω

If no wiring fault is detected and voltage was present between contacts 3+4:

- Replace throttle valve positioner (V60).

If no wiring fault is detected and no voltage was present between contacts 3+4:

- Check wiring from contact 3 to relay plate and from contact 4 to engine earth according to current flow diagram.

1.15 - Checking throttle valve potentiometer

Special tools, testers, measuring instruments and auxiliary items required

- Fault reader V.A.G 1551 or vehicle system tester V.A.G 1552 with cable V.A.G 1551/3
- Test box V.A.G 1598/18
- Hand multimeter V.A.G 1526 or multimeter V.A.G 1715
- Adapter set V.A.G 1594
- Current flow diagram

Test sequence

- Connect fault reader V.A.G 1551 (V.A.G 1552) and select engine electronics control unit with the "Address word" 01. When doing this the ignition must be switched on.
  (Connecting fault reader and selecting engine electronics control unit => Page 2 .)

-> Indicated on display:

```
Rapid data transfer        HELP
Select function XX
```

- Press keys 0 and 8 for the function "Read measured value block" and confirm entry with Q key.

-> Indicated on display:

```
Read measured value block     HELP
Input display group number XXX
```

Copyright by Volkswagen AG. Volkswagen AG does not guarantee or accept any liability with respect to the correctness of information in this document. Protected by copyright. Commercial use or distribution of this document is not permitted unless authorised by Volkswagen AG.
satelettronica

- Press keys 0, 0 and 0 for "Display group number 0" and confirm entry with Q key.

-> Indicated on display:
(1...10 = Display zones)

```
Read measured value block      0
     1      2      3      4      5      6
7     8      9      10
```

- Slowly open throttle valve fully and observe the numerical figures in display zones 2 and 3.

  Display zone 2:
  The numerical figure must increase uniformly until throttle valve is 1/4 open and then remain constant
  Display zone 3:
  The numerical figure must increase uniformly over the entire range

- Press ⇒key.
- Press keys 0 and 6 for the function "End output" and confirm entry with the Q key.

If numerical figures in display zones 2 and 3 do not change as described:
- Switch off ignition.

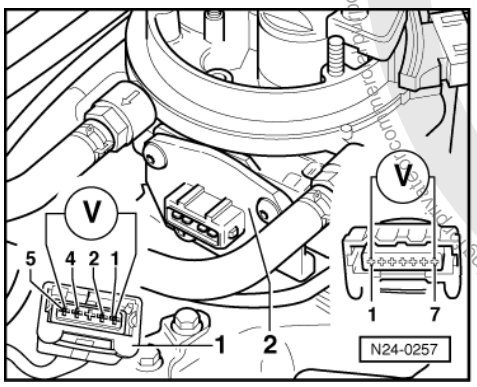

- -> Pull connector -1- off throttle valve potentiometer -2-.
  (5 pin connector for manual gearbox)
  (7 pin connector for automatic gearbox)
- Connect multimeter with aux. cables from V.A.G 1594 to measure voltage at connector contacts
  Manual gearbox to contacts 1+5
  Automatic gearbox to contacts 1+7
- Switch on ignition and measure voltage
  Specification: approx. 5 V
- Switch off ignition.

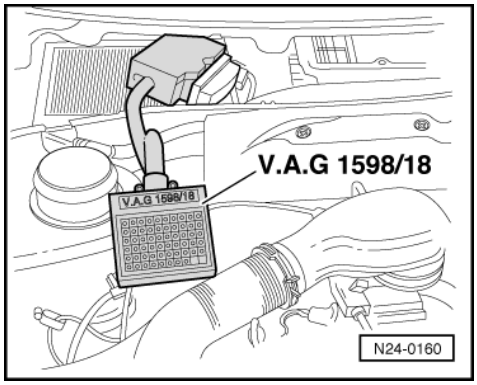

- -> Connect test box V.A.G 1598/18 to control unit wiring loom.
- Check wiring between test box 1598/18 and disconnected connector of throttle valve potentiometer for open circuit according to current flow diagram.
  5 pin connector (manual gearbox)
  Contact 1+socket 17

Protected by copyright. Copying for private or commercial purposes, in part or in whole, is not permitted unless authorised by Volkswagen AG. Volkswagen AG does not guarantee or accept any liability with respect to the correctness of information in this document. Copyright by Volkswagen AG.
satelettronica

Contact 2+socket 41
Contact 4+socket 18
Contact 5+socket 14
Wire resistance: Max. 1.5 ω

7 pin connector (automatic gearbox):
Contact 1+socket 17
Contact 2+socket 41
Contact 6+socket 18
Contact 7+socket 14
Wire resistance: max. 1.5ω

- Additionally check wires for short to one another.
  Specification: ∞ω

If no wiring fault is detected and voltage was present between contacts 1+5 or 1+7:

- Replace lower part of injection unit.

If no wiring fault is detected and no voltage was present between contacts 1+5 or 1+7:

- Renew Mono Motronic control unit (J257)
  =>Page 19 , item 2 .

1.16 - Checking coolant temperature sender

Protected by copyright. Copying for private or commercial purposes, in part or in whole, is not permitted unless authorised by Volkswagen AG. Volkswagen AG does not guarantee or accept any liability with respect to the correctness of information in this document. Copyright by Volkswagen AG.

Special tools, testers and auxiliary items

- Fault reader V.A.G 1551 or vehicle system tester V.A.G 1552 with cable V.A.G 1551/3
- Test box V.A.G 1598/18
- Hand multimeter V.A.G 1526 or multimeter V.A.G 1715
- Adapter set V.A.G 1594
- Current flow diagram

Test sequence

- Connect fault reader V.A.G 1551 (V.A.G 1552) and select engine electronics control unit (address word 01); carry out selection at idling.
  => Page 2

-> Indicated on display:

```
Rapid data transfer      HELP
Select function XX
```

- Input 08 for "Read measured value block" function and confirm with Q.

-> Indicated on display:

```
Read measured value block    HELP
Input display group number XX
```

- Input 01 for "Display group number" and confirm with Q.
- Note intake air temperature figure in display zone 2.
- Determine possible cause of fault according to the table and continue with appropriate check.

Display	Cause	Continuation of check
app. 240 or app. -50 °C	Open circuit or short to positive	=> Page 46
App. 0 or app. 130°C	Short to earth	=> Page 47

Display	Cause	Continuation of check
Between 8...230 or app. coolant temperature1)	---	Only if sporadic faults have been detected:2) => Page 47

1) If a temperature is displayed which deviates greatly from the ambient temperature of the sender, check sender wiring for transfer resistances. For display group 0:
125 corresponds to approx. 20 °C
25 corresponds to approx. 85 °C

2) Check is only possible when the engine is cold.

Continuation of check when display = approx. 240 or approx. -50°C:

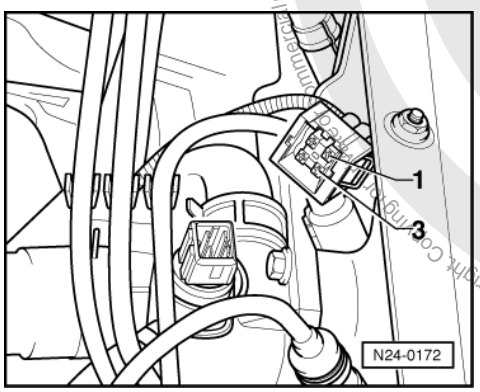

- -> Pull 4 pin connector -1- of coolant temperature sender (G62).
- Bridge connector contacts 1+3 with aux. cables from V.A.G 1594 and observe display.

Display 0 or approx. 130 ° C:

- Replace coolant temperature sender -2-.

Display approx. 240 or approx. -50 ° C:

- Press ⇒ button.

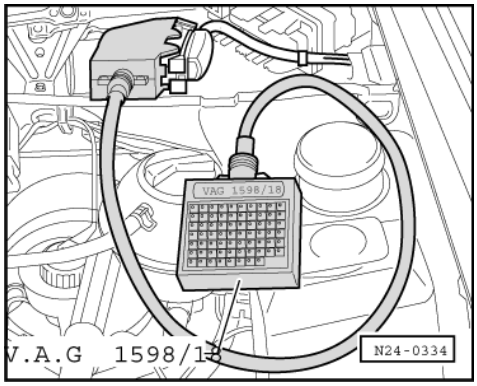

- Input 06 for "End output" and confirm with Q.
- Switch off ignition
- -> Connect test box V.A.G 1598/18 to control unit wiring loom.
- Check wire between test box socket 42+4 pin connector contact 3 for open circuit according to current flow diagram.
  Wire resistance: Max. 1.5 ω
- Additionally check wire for short to battery positive.
  Specification: ∞ω
- Check wire between test box socket 17+4 pin connector contact 1 for open circuit according to current flow diagram.

Protected by copyright. Copying for private or commercial purposes, in any form or medium, is not permitted unless authorised by Volkswagen AG. Volkswagen AG does not guarantee or accept any liability with respect to the correctness of information in this document. Copyright by Volkswagen AG.
satelettronica

Wire resistance: Max. 1.5 ω

If no fault in wire is detected:

- Renew Mono Motronic control unit (J257)
  =>Page 19 , item 2 .

Continuation of check when display = 0 or approx.130 °C:

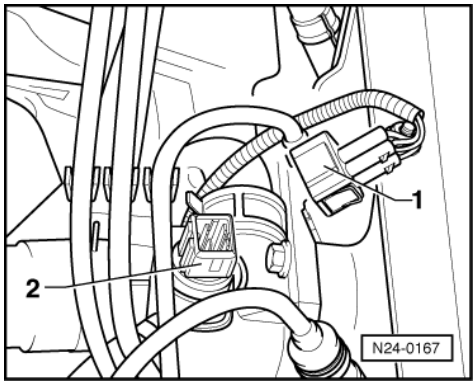

- -> Pull 4 pin connector -1- of coolant temperature sender (G62) -2-.

Display approx. 240 or approx. -50 ° C:

- Replace coolant temperature sender -2-.

Display 0 or approx. 130 ° C:

- Press ⇒ button.
- Input 06 for "End output" and confirm with Q.
- Switch off ignition
- Pull connector off Mono Motronic control unit.
- Check wire between control unit connector and 4 pin connector contact 3 for short to wire contact 1 and to vehicle earth, according to current flow diagram.
  Specification: ∞ω

If no fault in wire is detected:

- Renew Mono Motronic control unit (J257)
  =>Page 19 , item 2 .

Continuation of check when display = coolant temperature:

Functional check of sender

- ->

```
Read measured value block 1
     1      2      3      4
```

Observe coolant temperature figure in display zone 2. The temperature figure must Increase uniformly and without interruption.

Notes:

- If the display on fault reader jumps by 2...5 °C, it is a control unit fault and not caused by a defective sender.
- If irregular engine running occurs in certain temperature ranges and the temperature figure does not increase without interruption, the temperature signal is temporarily interrupted and the sender must be renewed.

- Press ⇒ key.
- In put 06 for "End output" and confirm with Q.

Protected by copyright. Copying for private or commercial purposes, in part or in whole, is not permitted unless authorised by Volkswagen AG. Volkswagen AG does not guarantee or accept any liability with respect to the correctness of information in this document. Copyright by Volkswagen AG.
satelettronica

1.17 - Checking intake air temperature sender

Special tools, testers and auxiliary items

- Fault reader V.A.G 1551 or vehicle system tester V.A.G 1552 with cable V.A.G 1551/3
- Test box V.A.G 1598/18
- Hand multimeter V.A.G 1526 or multimeter V.A.G 1715
- Adapter set V.A.G 1594
- Current flow diagram
- Chilling spray (commercially available)

Test sequence

- Connect fault reader V.A.G 1551 (V.A.G 1552) and select engine electronics control unit (address word 01); carry out selection with ignition switched on.
  => Page 2

-> Indicated on display:

```
Rapid data transfer      HELP
Select function XX
```

- Input 08 for "Read measured value block" function and confirm with Q.

-> Indicated on display:

```
Read measured value block      HELP
Input display group number XX
```

- Input 02 for "Display group number" and confirm with Q.

-> Indicated on display:
(1...4 = Display zones)

```
Read measured value block 2
     1     2     3     4
```

- Note intake air temperature figure in display zone 4.

Display	Cause	Continuation of check
Approx. -55 °C	Open circuit or short to positive	=> Page 48
Approx. 130 °C or higher	Short to earth	=> Page 49
Approx. ambient temperature1)	---	=> Page 50

1) If a temperature is displayed which deviates greatly from the ambient temperature of the sender, check sender wiring for transfer resistances.

Continuation of check when display = -55 °C:

- Remove air intake elbow.

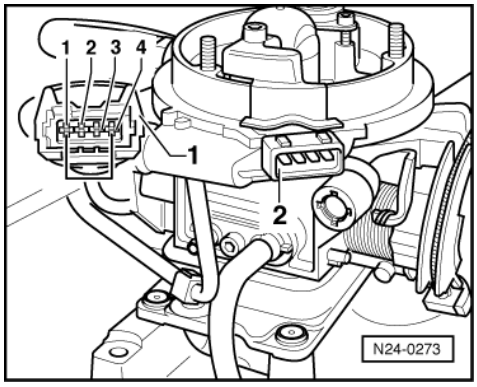

Protected by copyright. Copying for private or commercial purposes, in any form and by any means, is not permitted unless authorised by Volkswagen AG. Volkswagen AG does not guarantee or accept any liability with respect to the correctness of information in this document. Copyright by Volkswagen AG.
satelettronica

- -> Pull 4 pin connector -1- off injection unit -2-.
- Bridge connector contacts 1+4 with aux. cables from V.A.G 1594 and observe display.

Display approx. 130 °C or higher:

- Replace injector bracket with intake air temperature sender (G42) =>Page 26 , item 3 .

Display approx. -55 °C:

- Press ⇒ button.
- Input 06 for "End output" and confirm with Q.

- Switch off ignition

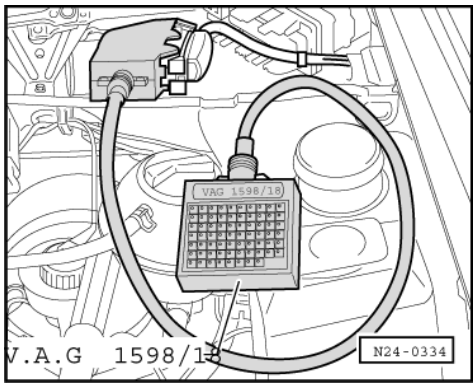

- -> Connect test box V.A.G 1598/18 to control unit wiring loom.
- Check wire between test box socket 43+4 pin connector contact 4 for open circuit according to current flow diagram.
  Wire resistance: Max. 1.5 ω
- Additionally check wire for short to battery positive.
  Specification: ∞ω
- Check wire between test box socket 17+4 pin connector contact 1 for open circuit according to current flow diagram.
  Wire resistance: Max. 1.5 ω

If no fault in wire is detected:

- Renew Mono Motronic control unit (J257)
  =>Page 19 , item 2 .

Continuation of check when display = 130 °C or higher:

- Remove air intake elbow.

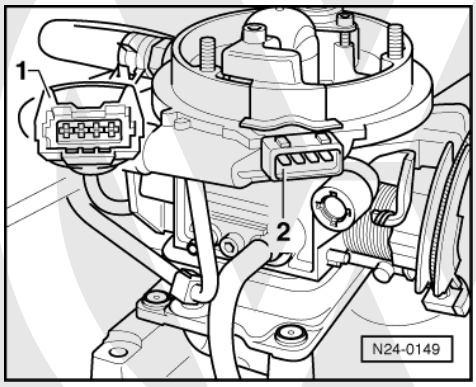

- -> Pull 4 pin connector -1- off injection unit -2-.

Display approx. -55 °C:

satelettronica
Protected by copyright. Copyright by Volkswagen AG. Volkswagen AG does not guarantee or accept any liability with respect to the correctness of information in this document. Copyright by Volkswagen AG. Copying for private or commercial purposes, in part or in whole, is not permitted unless authorised by Volkswagen AG.

- Replace injector bracket with intake air temperature sender (G42) =>Page 26 , item 3 .

Display approx. 130 °C or higher:
- Press ⇒ button.
- Input 06 for "End output" and confirm with Q.
- Switch off ignition
- Pull connector off Mono Motronic control unit.
- Check wiring to control unit connector at 4 pin connector contact 4 for short to wire contact 1 and to vehicle earth.
  Specification: ∞ω

If no wiring fault is detected:
- Renew Mono Motronic control unit (J257)
  =>Page 19 , item 2 .

Continuation of check when display = ambient temperature:
- Remove air intake elbow.

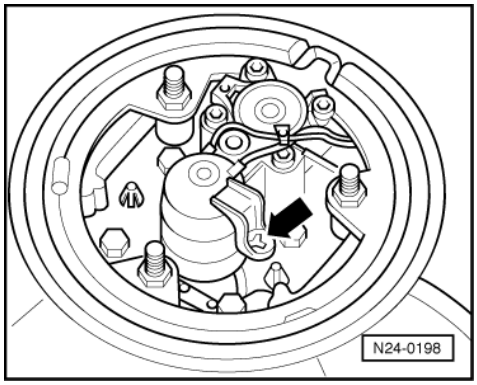

- -> Spray sender arrow with a commercial chilling spray and at the same time observe the temperature figure. The temperature figure must
  decrease.
- Note intake air temperature figure in display zone 4.
- Press ⇒ button.
- Input 06 for "End output" and confirm with Q.

1.18 - Checking injector

Test conditions
- Fuse 18 OK.

Checking function
- Remove air intake elbow.

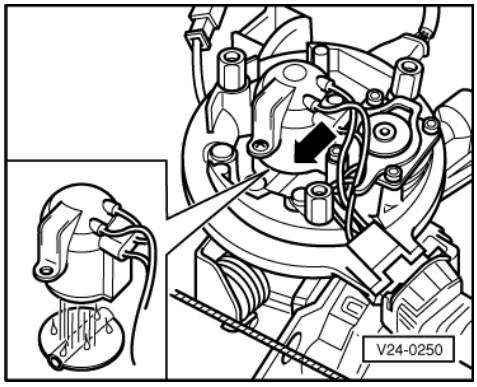

Protected by copyright. Copying for private or commercial purposes, in part or in whole, is not permitted unless authorised by Volkswagen AG. Volkswagen AG does not guarantee or accept any liability with respect to the correctness of information in this document. Copyright by Volkswagen AG.
satelettronica

- -> Start engine and run at idling speed, or if engine will not start, operate starter. The spray formation must be visible on the
  throttle valve.
- Switch off ignition and check injector (N30) for leaks.
  Leakage must not exceed 2 drops per minute.

If no spray can be seen:

- Check fuel pressure regulator => Page 59 .
- Check activation.

Checking activation

Special tools, testers and auxiliary items

- Test box V.A.G 1598/18
- Diode test lamp V.A.G 1527
- Adapter set V.A.G 1594
- Current flow diagram

Test sequence

- Remove air intake elbow.

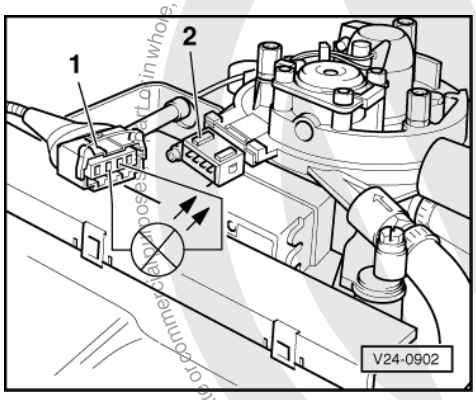

- -> Pull 4 pin connector -1- off injection unit -2-.
- Connect diode test lamp V.A.G 1527 with aux. cables from V.A.G 1594 to connector contacts 2 and 3.
- Operate starter and check injector voltage supply.
  LED must flicker

LED flickers:

- Switch off ignition
- Renew injector.

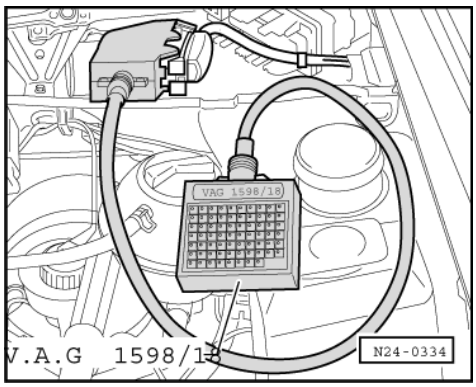

Protected by copyright. Copyright by Volkswagen AG.
Copyright by Volkswagen AG. Volkswagen AG does not guarantee or accept any liability with respect to the correctness of information in this document. Copyright by Volkswagen AG. Reproduction or commercial use is not permitted unless authorised by Volkswagen AG.
satelettronica

If the LED does not flicker:

- Switch off ignition
- -> Connect test box V.A.G 1598/18 to control unit wiring loom.
- Check wire between 4 pin connector contact 3 and test box socket 7 for open circuit according to current flow diagram (from the central connector to control unit = resistance wire).
  Wire resistance: Max. 3.5 ω
- Check wire between 4 pin connector contact 2 and relay plate for open circuit according to current flow diagram (from the central connector to relay plate = resistance wire).
  Wire resistance: Max. 2.5 ω
- Additionally check wires for short to one another.
  Specification: ∞ω

If no wiring fault is detected:

- Renew Mono Motronic control unit (J257)
  =>Page 19 , item 2 .

Checking injector resistance

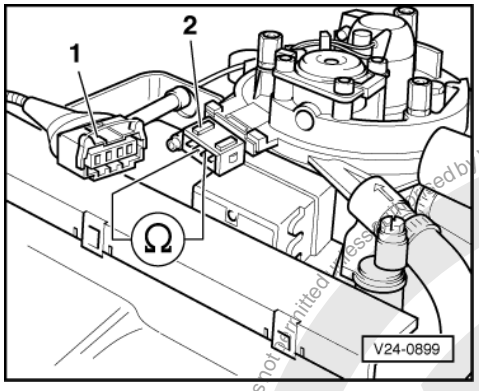

- -> Pull 4 pin connector -1- off injection unit -2-.
- Check injector resistance with multimeter and aux. cables from V.A.G 1594 on contacts 2+3 of connector -2-:
  Specification: 1.2...1.6 ω
  (at an ambient temperature of +15...30 °C)

1.19 - Checking speed signal

Special tools, testers and auxiliary items

- Fault reader V.A.G 1551 or vehicle system tester V.A.G 1552 with cable V.A.G 1551/3
- Hand multimeter V.A.G 1526 or multimeter V.A.G 1715
- Test box V.A.G 1598/18
- Adapter set V.A.G 1594
- Current flow diagram

Test conditions

- Speedometer OK., checking:

=> Repair group 90; Electrical system Electrical system

Test sequence

Note:

To check the speed signal the vehicle must be driven. To do this a second person is necessary.

Protected by copyright. Copyright by Volkswagen AG. Volkswagen AG does not guarantee or accept any liability with respect to the correctness of information in this document. Copyright by Volkswagen AG.
satelettronica

- Connect fault reader V.A.G 1551 (V.A.G 1552) and select engine electronics control unit (address word 01); carry out selection at idling.
  => Page 2

-> Indicated on display:

```
Rapid data transfer      HELP
Select function XX
```

- Input 08 for "Read measured value block" function and confirm with Q.

-> Indicated on display:

```
Read measured value block     HELP
Input display group number XX
```

- Input 04 for "Display group number" and confirm with Q.

-> Indicated on display:
(1...4 = Display zones)

```
Read measured value block 4
    1     2     3     4
```

- Carry out test drive and when doing this observe display (2nd person necessary).
- Observe displayed figure in display zone 3:
  Specification:
  0...4 km/h = 0
  4...7 km/h = >4
  above 7 km/h = >7
- Press ⇒ key.
- Input 06 for "End output" and confirm with Q.

If no speed is indicated:

- Switch off ignition

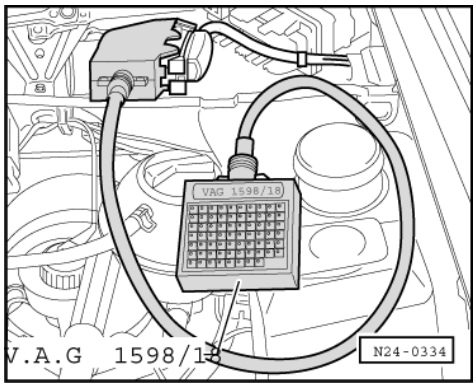

- -> Connect test box V.A.G 1598/18 to control unit wiring loom.
- Connect multimeter to sockets 20+36 to measure voltage.
- Switch on ignition.
- Raise left front wheel or push vehicle. The voltage figure must fluctuate between
  0...at least 4 V.

1.20 - Checking control unit voltage supply

Special tools, testers and auxiliary items

- Fault reader V.A.G 1551 or vehicle system tester V.A.G 1552 with cable V.A.G 1551/3
- Test box V.A.G 1598/18
- Hand multimeter V.A.G 1526 or multimeter V.A.G 1715
- Adapter set V.A.G 1594

satelettronica

- Current flow diagram

Check conditions

- Battery voltage at least 11 V
- Fuse 15 OK.
- Alternator OK

Test sequence

- Connect fault reader V.A.G 1551 (V.A.G 1552) and select engine electronics control unit (address word 01); carry out selection at idling.
  => Page 2

-> Indicated on display:

```
Rapid data transfer      HELP
Select function XX
```

- Input 08 for "Read measured value block" function and confirm with Q.

-> Indicated on display:

```
Read measured value block      HELP
Input display group number XX
```

- Input 02 for display group 02 and confirm with Q.

-> Indicated on display:
(1...4 = Display zones)

```
Read measured value block 2
     1     2     3     4
```

- Read off figure displayed in display zone 3.
  Specification: approx. battery voltage constant
- Press ⇒ key.
- Input 06 for "End output" and confirm with Q.
- Switch off ignition

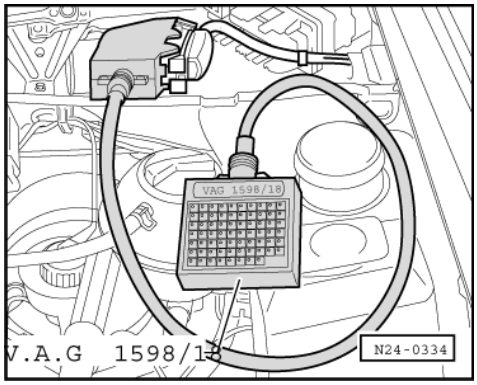

- -> Connect test box V.A.G 1598/18 to control unit wiring loom.

Checking voltage supply terminal 30

- Measure fault memory voltage supply with multimeter and aux. cables from V.A.G 1594 between test box sockets 1+21:
  Specification: Min. 11 V

If the measurement with V.A.G 1551/1552 does not indicate battery voltage:

Checking voltage supply terminal 15

- Switch on ignition.

Protected by copyright. Copyright by Volkswagen AG. Volkswagen AG does not guarantee or accept any liability with respect to the correctness of information in this document. Copyright by Volkswagen AG. Reproduction or use in whole or in part is not permitted without authorised by Volkswagen AG. Volkswagen AG does not guarantee or accept any liability with respect to the correctness of information in this document. Copyright by Volkswagen AG.
satelettronica

- Measure control unit voltage supply with multimeter and aux. cables from V.A.G 1594 between test box sockets 1+23:
  Specification: Min. 11 V

If the specification is not obtained:

- Check wiring according to current flow diagram.

1.21 - Checking air conditioner and air conditioner compressor signals

These signals from the air conditioner cause the initial control value for the idling stabilization to be increased when the air conditioner compressor switches in. Thereby the idling stabilization remains in the middle of the regulating range.

Special tools, testers and auxiliary items

- Fault reader V.A.G 1551 or vehicle system tester V.A.G 1552 with cable V.A.G 1551/3
- Test box V.A.G 1598/18
- Hand multimeter V.A.G 1526 or multimeter V.A.G 1715
- Adapter set V.A.G 1594
- Current flow diagram

Test conditions

- Function of air conditioner OK.
- Air conditioner switched off
- No faults stored in fault memory
  => Page 3 , interrogating fault memory
- Interior of vehicle has room temperature (above 15 ° C)

Test sequence

- Connect fault reader V.A.G 1551 (V.A.G 1552) and select engine electronics control unit (address word 01); carry out selection at idling.
  => Page 2

-> Indicated on display:

```
Rapid data transfer      HELP
Select function XX
```

- Input 08 for "Read measured value block" function and confirm with Q.

-> Indicated on display:

```
Read measured value block      HELP
Input display group number XX
```

- Input 01 for "Display group number" and confirm with Q.

-> Indicated on display:
(1...4 = Display zones)

```
Read measured value block      1
     1     2     3     4
```

- Observe display zone 4 -8 digit number block-:

  4th and 5th position from right must display 0
  Display: 01000000

- Switch on air conditioner (lowest temperature and highest blower speed).

satelettronica

4th and 5th position from right must now display 1
Display: 01011111
4th position from right = air conditioner switched on
5th position from right = air conditioner compressor switched on

If the display does not indicate as described:

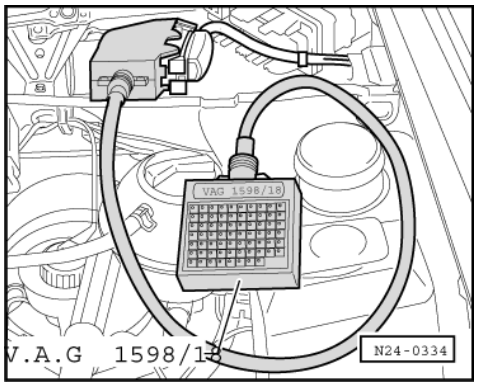

- -> Connect test box V.A.G 1598/18 to control unit wiring loom.
- Check wiring between test box sockets 33 and 35 and the air conditioner for open circuit according to current flow diagram.
  Wire resistance: Max. 1.5 ω

1.22 - Matching automatic gearbox control unit and throttle valve potentiometer to one another

Note:

The automatic gearbox control unit (J217) and throttle valve potentiometer (G69) must be matched to one another after the following work has been completed:

- Renewal of automatic gearbox control unit
- Renewal of injection unit (lower part)

Matching

- Using fault reader V.A.G. 1551 (or vehicle system tester V.A.G 1552) bring system to basic setting:

=> Automatic gearbox 096; Repair Group 01; Self-diagnosis; Introduction of basic setting Self-diagnosis Introduction of basic setting

1.23 - Checking signal for automatic gearbox control unit

Special tools, testers, measuring instruments and auxiliary items required

- Fault reader V.A.G 1551 or vehicle system tester V.A.G 1552 with cable V.A.G 1551/3
- Test box V.A.G 1598/18
- Hand multimeter V.A.G 1526 or multimeter V.A.G 1715
- Adapter set V.A.G 1594
- Current flow diagram

Test conditions

- No faults stored in fault memory
  => Page 3 , interrogating fault memory

Protected by copyright. Copyright by Volkswagen AG. Volkswagen AG does not guarantee or accept any liability with respect to the correctness of information in this document. Copying for private or commercial purposes, in part or in whole, is not permitted unless authorised by Volkswagen AG.
satelettronica

Protected by copyright. Copying for private or commercial purposes, in part or in whole, is not permitted unless authorised by Volkswagen AG. Volkswagen AG does not guarantee or accept any liability with respect to the correctness of information in this document. Copyright by Volkswagen AG.

Test sequence

- Connect fault reader V.A.G 1551 (V.A.G 1552) and select engine electronics control unit with the "Address word" 01. When doing this the ignition must be switched on.
  (Connecting fault reader and selecting engine electronics control unit => Page 2 .)

-> Indicated on display:

```
Rapid data transfer      HELP
Select function XX
```

- Press keys 0 and 8 for the function "Read measured value block" and confirm entry with Q key.

-> Indicated on display:

```
Read measured value block     HELP
Input display group number XXX
```

- Press keys 0, 0 and 1 for "Display group number 1" and confirm entry with Q key.

-> Indicated on display:
(1...4 = Display zones)

```
Read measured value block     1
     1     2     3     4
```

- Observe display zone 4 -8 digit number block-:
- Selector lever at P or N

  1st position from right must display 0
  Display: 01000010

- Selector lever at 1, 2, 3, D or R

  1st position from right must display 1
  Display: 01000011

- Press ⇒key.
- Press keys 0 and 6 for the function "End output" and confirm entry with the Q key.

If the display does not indicate as described:

- Switch off ignition.

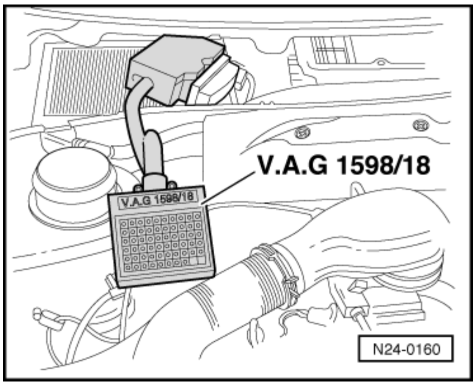

- -> Connect test box V.A.G 1598/18 to control unit wiring loom.
- Check voltage with multimeter and aux. cables from V.A.G 1594 between test box sockets 12+23:
  Selector lever at P or N
  Specification: Min. 11 V
  Selector lever in 1, 2, 3, D or R
  Specification: 0 V

If the specifications are not attained:

satelettronica

- Check wiring according to current flow diagram.

1.24 - Matching engine electronic control unit to electronic immobilizer

Special tools, testers and auxiliary items

- Fault reader V.A.G 1551 or vehicle system tester V.A.G 1552 with cable V.A.G 1551/3

Test conditions

- Authorized vehicle key required

Work sequence

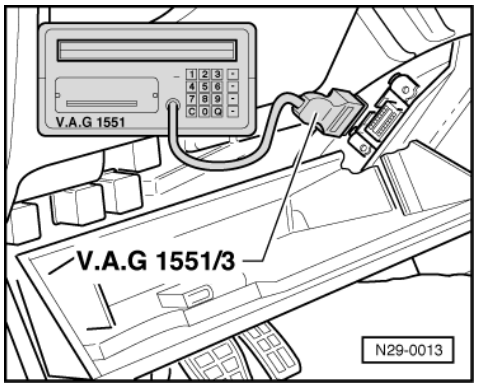

- -> Fold down left shelf.
- Connect fault reader (or vehicle system tester) with cable V.A.G 1551/3.
- Switch on ignition.
- Operate fault reader taking into account the information on the display:
- Input 1 for "Rapid data transfer".
- Input 25 for address word "Immobilizer" and confirm with Q.
- After the immobilizer control unit has registered, press ⇒ key.

-> Indicated on display:

```
Rapid data transfer     HELP
Select function XX
```

- Input 10 for "Adaption" function and confirm with Q.

-> Indicated on display:

```
Adaption
Feed in channel number XX
```

- Input 00 for channel number 0 and confirm with Q.

-> Indicated on display:

```
Adaption     Q
Erase learnt values?
```

- Confirm entry by pressing Qkey.

-> Indicated on display:

```
Adaption
Learnt values have been erased
```

- Conclude adaption by pressing ⇒ key.
- Input 06 for "End output" and confirm with Q.

satelettronica
Protected by copyright. Copying for private or commercial purposes, in part or in whole, is not permitted unless authorised by Volkswagen AG. Volkswagen AG does not guarantee or accept any liability with respect to the correctness of information in this document. Copyright by Volkswagen AG.

- Switch off ignition

Note:
The identity of the engine control unit is read into the immobilizer control unit when next switching the ignition on.

1.25 - Checking fuel pressure regulator and holding pressure

Special tools, testers and auxiliary items
- Pressure tester V.A.G 1318
- Adapter 1318/1
- Adapter 1318/10
- Adapter 1318/11

Test conditions
- Fuel pump delivery rate OK, checking:

=> Repair group 20; Removing and installing parts of the fuel supply system; Checking fuel pump Removing and installing parts of the fuel supply system Checking fuel pump

Test sequence

Note:
Check whether a coded radio is installed as during the forthcoming work sequences the battery earth strap must be disconnected. Obtain radio code first if necessary.

Warning!
Fuel system is under pressure! Before opening the system place a cloth around the connection. Then release pressure by carefully loosening the connection.

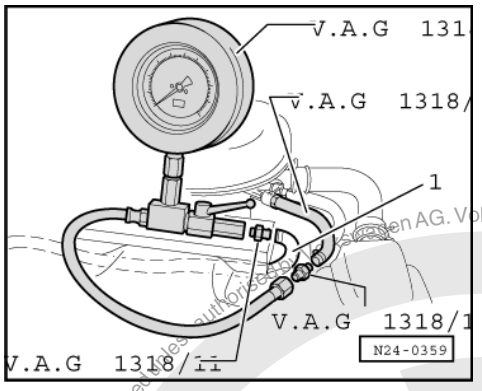

- -> Connect pressure gauge V.A.G 1318 with adapter 1318/1 , /11 and /23 between fuel supply pipe -1- and injection unit:
- Open pressure gauge tap (lever in direction of flow).
- Start engine and run at idling speed.

If the engine does not start:

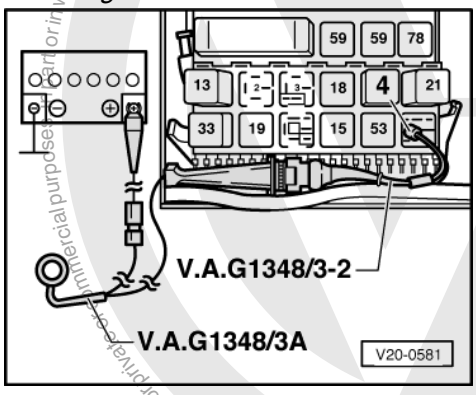

satelettronica
Protected by copyright. Copying for private or commercial purposes, in whole or in part, is not permitted unless authorised by Volkswagen AG. Volkswagen AG does not guarantee or accept any liability with respect to the correctness of information in this document. Copyright by Volkswagen AG.

- -> Pull fuel pump relay (J17) out of relay plate (relay position 12).

Note:

If the relay cannot be removed from the relay plate without tools then first disconnect battery earth strap.

- Connect remote control V.A.G 1348/3A with adapter cable V.A.G 1348/3-2 to contact 4 and battery positive (+).
- Operate remote control.

- Check fuel pressure.
  Specification: Approx. 0.8...1.2 bar

If the specification is exceeded or not reached:

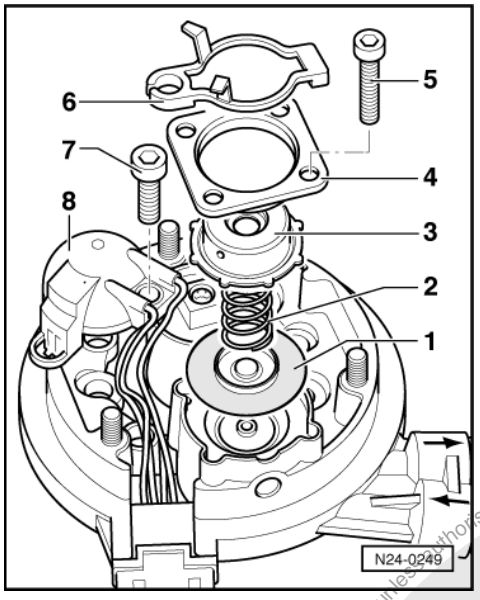

- -> Dismantle the pressure regulator as follows:

Note:

First remove the intake air temperature sender -8- and unclip the cable guide -6-.

- Clean the individual parts of the pressure regulator and the injection unit upper part.

Assembling

- Place the membrane -1- as shown in the injection unit upper part.
- Insert the spring -2- and compress it with the pressure regulator upper part -3-.
- Carefully tighten the retaining ring -4- with screws -5- (tightening torque: 1.5 Nm).

- Install the intake air temperature sender -8- and tighten screw -7- to 5 Nm.
- Clip on the cable guide -6-.

- Repeat the pressure regulator test.

If the specification is again not reached:

- Renew injection unit upper part.

If the specification is exceeded:

- Check return pipe for blockage, if necessary renew injection unit upper part.
- Switch off ignition or remote control and check holding pressure.
  Specification:

Reproduced by copyright. Copyright by Volkswagen AG. Volkswagen AG does not guarantee or accept any liability with respect to the correctness of information in this document. Copying for private or commercial purposes, in part or in whole, is not permitted unless authorised by Volkswagen AG.
satelettronica

at least 0.5 bar after 5 minutes.

If the holding pressure drops below specification:

- Check pipe connections, O rings on injector and injectors for leaks.
- Check fuel pump non-return valve.

=> Repair group 20; Removing and installing parts of the fuel supply system; Checking fuel pump Removing and installing parts of the fuel supply system Checking fuel pump

If the pressure drops again:

- Renew injection unit upper part.

Note:

The injection unit upper part and components of the fuel pressure regulator are matched to one another. The pressure regulator cannot be repaired. If the pressure regulator is defective the complete injection unit upper part must be renewed.

1.26 - Checking intake air system for leaks (unmetered air)

Protected by copyright. Copyright by Volkswagen AG. Copying for private or commercial purposes, in part or in whole, is not permitted unless authorised by Volkswagen AG. Volkswagen AG does not guarantee or accept any liability with respect to the correctness of information in this document.

satelettronica

Special tools, testers and auxiliary items

- Fault reader V.A.G 1551 or vehicle system tester V.A.G 1552 with cable V.A.G 1551/3
- Engine leak detector spray G 001 800 A1

Test sequence

Notes:

- The vacuum in the intake system will cause the leak detector spray to be drawn in with the unmetered air. The leak detector spray reduces the ignitability of the mixture. This leads to a drop in engine speed and to a change of Lambda probe reading.
- The safety precautions listed on the container must be adhered to.

- Connect fault reader V.A.G 1551 (V.A.G 1552) and select engine electronics control unit (address word 01); carry out selection at idling.
  => Page 2

-> Indicated on display:

```
Rapid data transfer     HELP
Select function XX
```

- Input 08 for "Read measured value block" function and confirm with Q.

-> Indicated on display:

```
Read measured value block     HELP
Input display group number XX
```

- Input 00 for "Display group number" and confirm with Q.

-> Indicated on display:
(1...10 = Display zones)

```
Read measured value block     0
     1     2     3     4     5     6
7     8     9     10
```

- Observe reading in display zone 5 (Lambda reading) and note range of reading.

- Systematically spray parts of the intake system with engine leak detector spray.

If the engine speed drops and the reading strays from the above range:

- Check for leaks in the area of intake system sprayed and eliminate leak.

1.27 - Checking intake air preheating

Special tools, testers and auxiliary items

◆ Hand vacuum pump V.A.G 1390

Test conditions

• Regulating flap vacuum unit not leaking

Checking regulating flap

- Loosen air cleaner upper part and remove filter element.

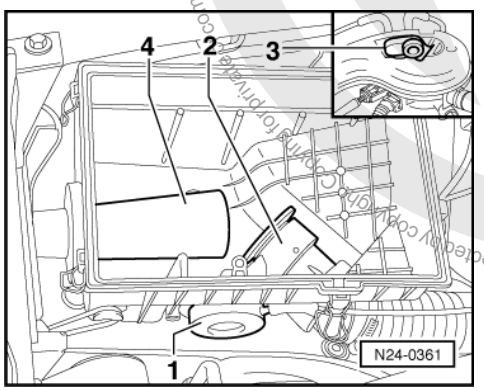

- -> Check position of regulating flap.
  Regulating flap must close-off the warm air intake -2-
- Pull vacuum pipe from vacuum unit -1- off temperature regulator -3- (in air intake elbow).
- Connect vacuum pipe to hand vacuum pump V.A.G 1390.
- Operate pump and check ease of movement of the regulating flap and function of the vacuum unit.
  Regulating flap must close off the cold air
  intake -4-

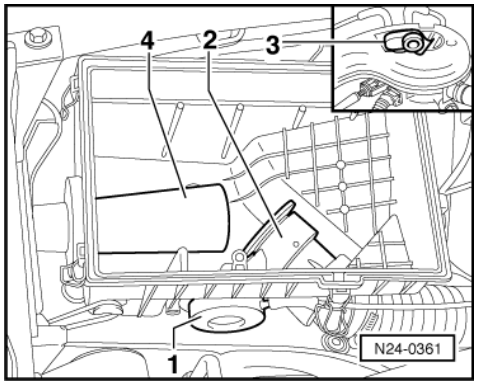

Checking temperature regulator

- Connect vacuum pipe to temperature regulator.
- Start engine and run at idling speed.

Volkswagen AG. Volkswagen AG does not guarantee or accept any liability with respect to the correctness of information in this document. Copyright by Volkswagen AG.
Protected by copyright. Copying for private or commercial purposes, in part or in whole, is not permitted unless authorised by Volkswagen AG.
satelettronica

- -> Check position of regulating flap after max. 20 seconds.

Temperature of temperature regulator	Regulating flap position
Below 35 °C	Cold air inlet -4- closed
Above 45 °C	Warm air intake -2- closed
Between 35 and 45 °C	Between cold and warm air intake

Protected by copyright. Copying for private or commercial purposes, in part or in whole, is not permitted unless authorised by Volkswagen AG. Volkswagen AG does not guarantee or accept any liability with respect to the correctness of information in this document. Copyright by Volkswagen AG.

satelettronica

28 - Ignition system

1 - Mono-Motronic injection and ignition system

1.1 - Mono-Motronic injection and ignition system

1.2 - Servicing ignition part

Notes:

- Only the components which specifically relate to the ignition system are dealt with here. For the other components of the injection and ignition system => Repair group 24.
- The injection and ignition system control unit is equipped with self diagnosis.
- Components marked with * are checked via the self diagnosis.
  => Page 3 , interrogating fault memory
- For trouble-free operation of the electrical components a voltage of at least 11.5 V is necessary.
- During some checks it is possible that the control unit will recognise and store a fault. Therefore after completing all checks and repairs the fault memory must be interrogated and if necessary erased.
  => Page 3 , interrogating fault memory

Safety precautions => Page 67

Test data, spark plugs => Page 68

Protected by copyright. Copying for private or commercial purposes, in part or in whole, is not permitted unless authorised by Volkswagen AG. Volkswagen AG does not guarantee or accept any liability with respect to the correctness of information in this document. Copyright by Volkswagen AG.

satelettronica

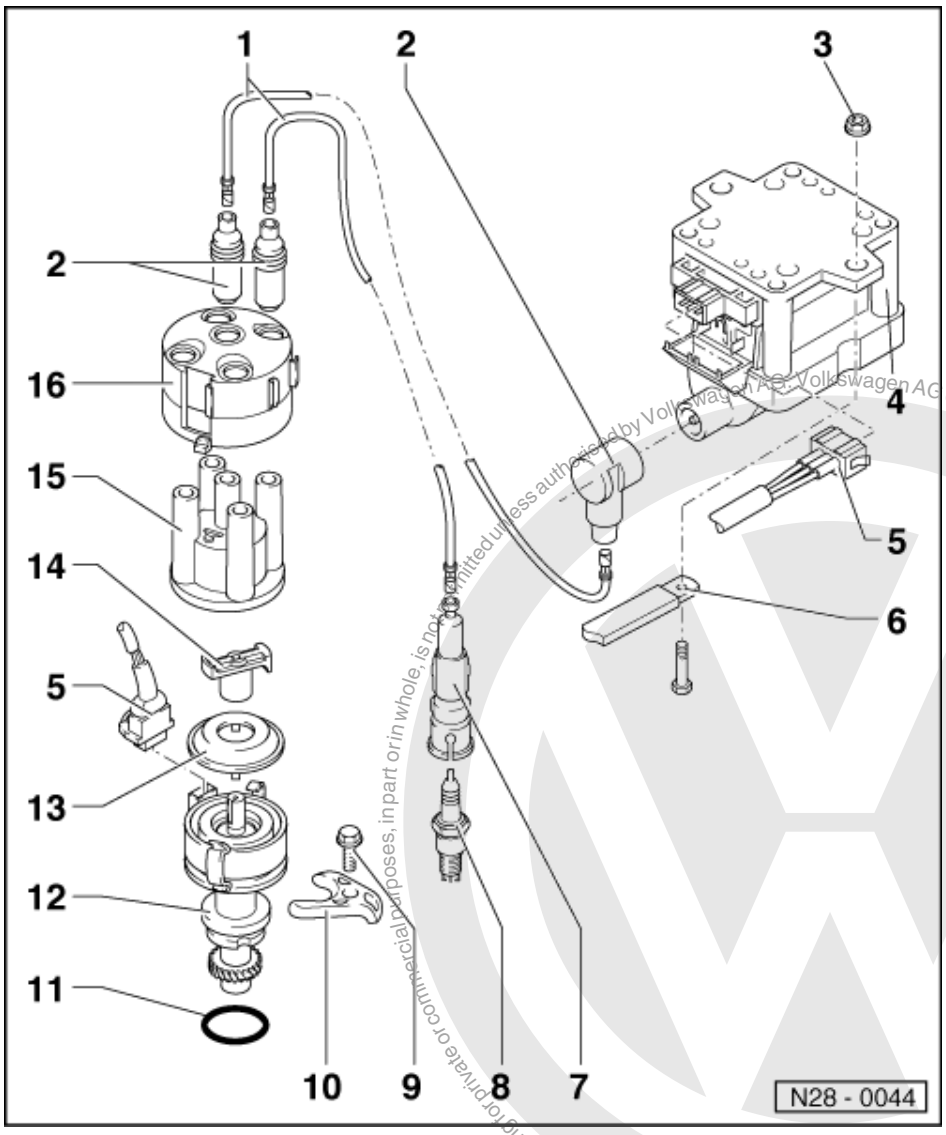

1 HT cable
- Check for continuity

2 Suppressor
- 0.6...1.4 kω

3 10 Nm

4 Ignition transformer (N152) with output stage (N157)
- Checking ignition transformer => Page 73
- Checking ignition transformer output stage => Page 73

5 Connector

6 Earth strap

7 Spark plug connector
- 4...6 kω

Protected by copyright. Copying for private or commercial purposes, in part or in whole, is not permitted unless authorised by Volkswagen AG. Volkswagen AG does not guarantee or accept any liability with respect to the correctness of information in this document. Copyright by Volkswagen AG.
satelettronica

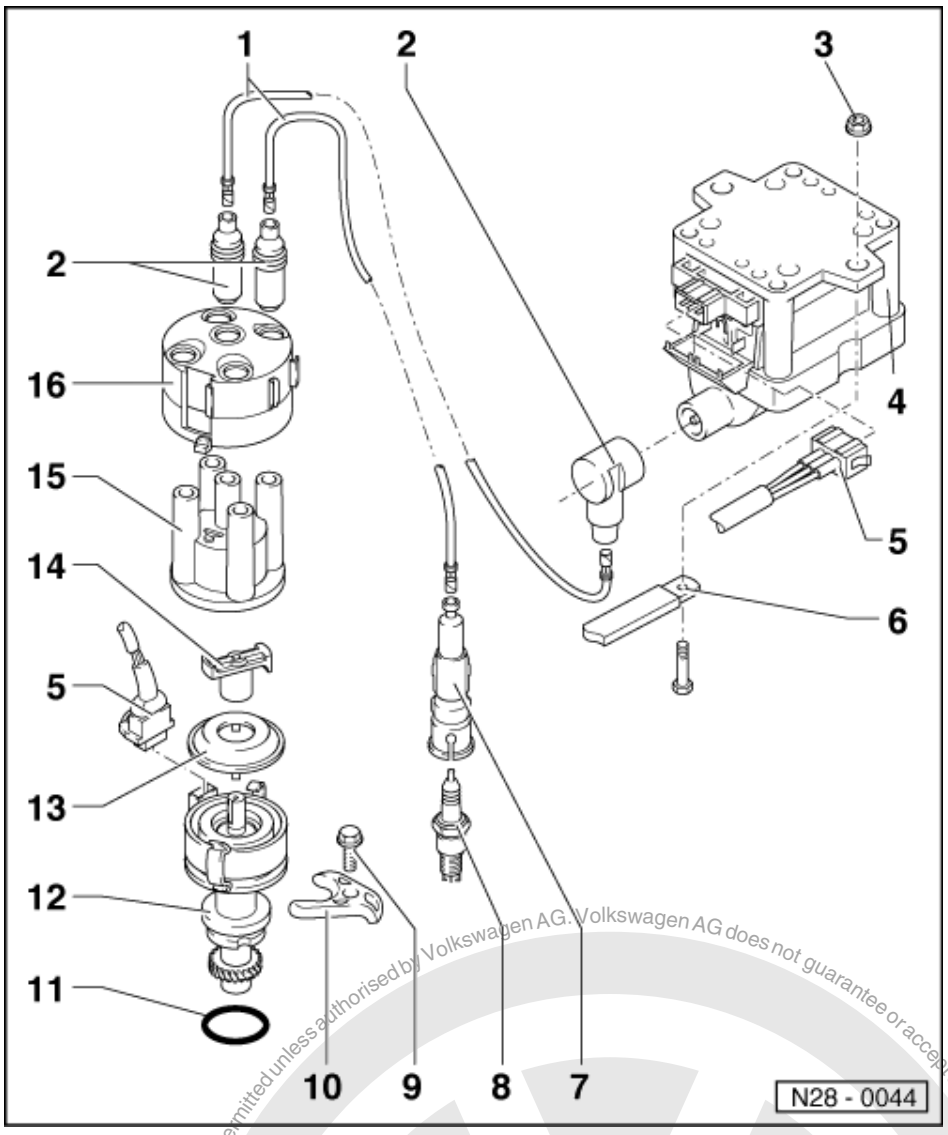

8 Spark plug, 25 Nm
- Type and electrode gap
  => Page 68

9 25 Nm

10 Clamp

11 O ring
- Renew if damaged

12 Ignition distributor with Hall sender (G40)*
- Installing => Page 68
- Checking and adjusting ignition timing => Page 69
- Checking Hall sender
  => Page 71

13 Dust cap

satelettronica
Protected by copyright. Copying for private or commercial purposes, in part or in whole, is not permitted unless authorised by Volkswagen AG. Volkswagen AG does not guarantee or accept any liability with respect to the correctness of information in this document. Copyright by Volkswagen AG.

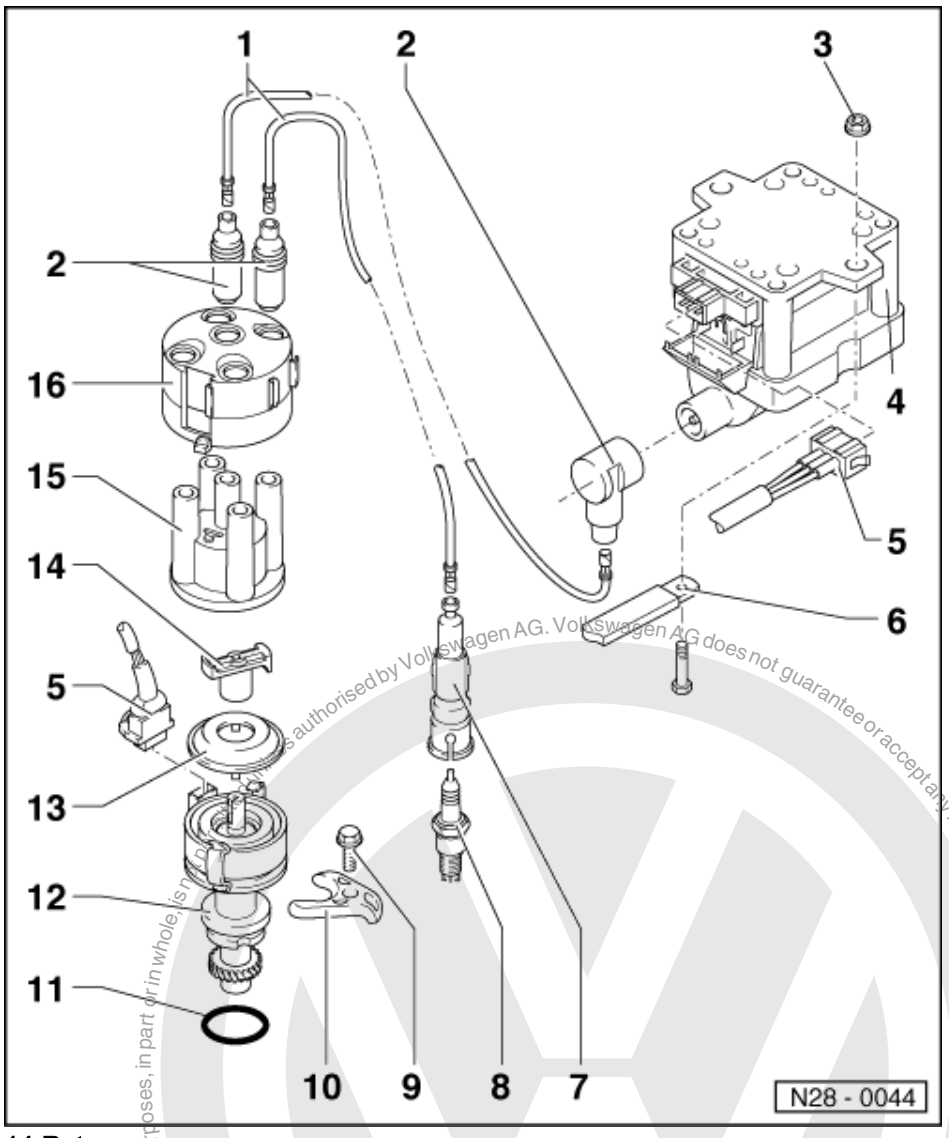

14 Rotor arm
- Marking: R1
- 0.6...1.4 kω

15 Distributor cap
- Check for cracks and signs of tracking
- Check contact wear
- Clean before fitting
- Check carbon brush for wear and freedom of movement

16 Screening cap

1.3 - Safety precautions

To prevent injuries to persons and/or damage to the injection and ignition system, the following must be observed:
- Do not touch or pull off ignition wiring when engine is running or turning at starter speed.
- The ignition must be switched off when disconnecting or connecting injection and ignition system wiring as well as test instrument cables.
- If the engine is to be turned at starter speed, without starting, e.g. when checking compressions, pull plug off Hall sender (distributor).
- Do not connect a capacitor to terminal 1 (-).
- Do not replace 1 kω (identification: R1) with a different type even for radio interference suppression.

Protected by copyright. Copyright by Volkswagen AG. Copying for private or commercial purposes, in part or in whole, is not permitted unless authorised by Volkswagen AG. Volkswagen AG does not guarantee or accept any liability with respect to the correctness of information in this document.
satelettronica

- For suppression purposes only 1 kω resistances are to be used on the H.T. leads and 5 kω spark plug connectors.

1.4 - Adjustment data, Spark plugs

Engine codes	1F	ADZ
Ignition timing1)		
Test figure	4...8 ° before TDC	4...8 ° before TDC
Adjustment figure	6 ± 1 ° before TDC	6 ± 1 ° before TDC
Marking	=> Page 70 , Fig. V28-0895	=> Page 70 , Fig. V28-0895
Engine speed	700...1000 rpm	775...975 rpm
Firing order	1-3-4-2	1-3-4-2
Spark plugs1)		
VW/Audi	101 000 036 AB	101 000 036 AA 101 000 040 AD
Manufacturer's desig.	BUR 5 ET	BUR 6 ET 14 GH-7 DTUR
Electrode gap	0.7...0.9 mm	0.7...0.9 mm
VW/Audi	101 000 050 AA	101 000 050 AC
Manufacturer's desig.	W 8 LTCR	W 7 LTCR
Electrode gap	0.9...1.1 mm	0.9...1.1 mm
Tightening torque	25 Nm	25 Nm

1) The up-to-date figures and the spark plug change intervals:

=> Exhaust emissions test binder

1.5 - Installing distributor

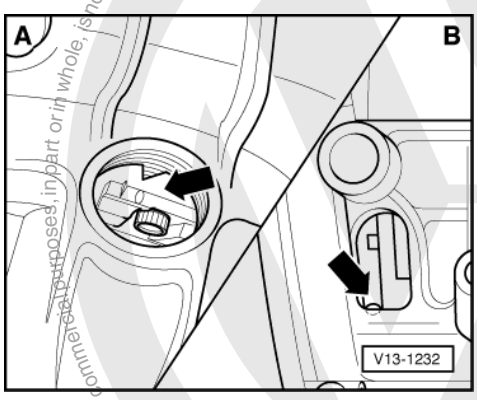

- -> Set flywheel -A- or drive plate -B- to TDC No. 1 cylinder.

Protected by copyright. Copying for private or commercial purposes, in part or in whole, is not permitted unless authorised by Volkswagen AG. Volkswagen AG does not guarantee or accept any liability with respect to the correctness of information in this document. Copyright by Volkswagen AG.
satelettronica

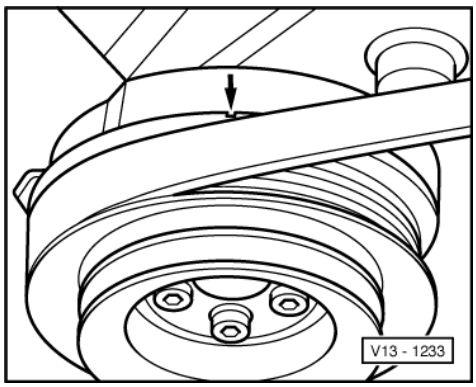

Engine removed

- -> Set vibration damper (V-belt pulley) to TDC No. 1 cylinder.

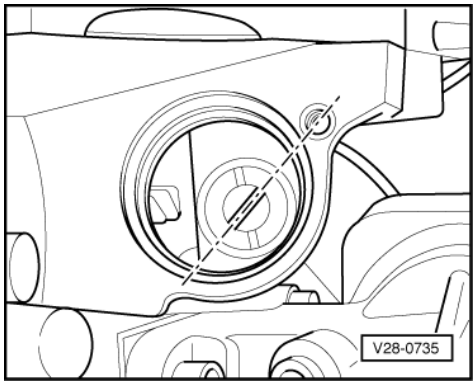

- -> Align oil pump shaft drive tongue with threaded hole.

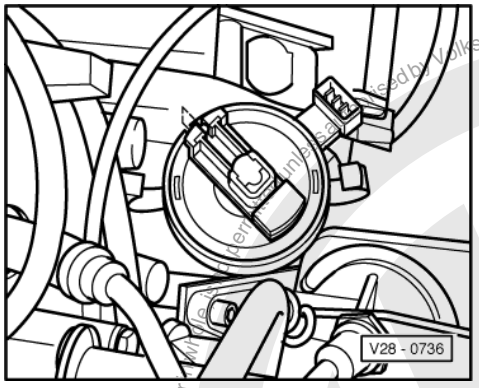

- -> Insert distributor so that the rotor arm points to No. 1 cylinder mark on the distributor body.
- Before fitting, clean distributor cap and check for cracks and signs of tracking, renew if necessary.
- Checking and adjusting ignition timing =>Page 69 .

1.6 - Checking and adjusting ignition timing

Special tools, testers and auxiliary items

- Fault reader V.A.G 1551 or vehicle system tester V.A.G 1552 with cable V.A.G 1551/3
- Ignition tester V.A.G 1767 or V.A.G 1367 with HT pick-up clamp V.A.G 1367/8

Check conditions

- Engine oil temperature min. 80 °C
- No faults stored in fault memory

Protected by copyright. Copyright by Volkswagen AG. Volkswagen AG does not guarantee or accept any liability with respect to the correctness of information in this document. Copyright by Volkswagen AG.
www.vwtechnicalinformation.com - Reproduced by Volkswagen AG. Volkswagen AG does not guarantee or accept any liability with respect to the correctness of information in this document. Copyright by Volkswagen AG.
For private and commercial purposes, see www.vwtechnicalinformation.com
satelettronica

=> Page 3 , interrogating fault memory

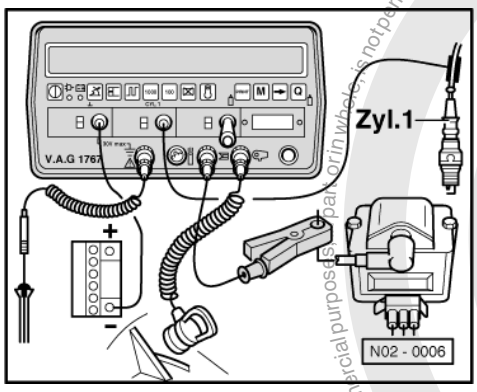

Test sequence

- -> Connect ignition tester V.A.G 1767 or ignition tester V.A.G 1367 with HT pick-up clamp V.A.G 1367/8.
- Connect fault reader V.A.G 1551 (V.A.G 1552) and select engine electronics control unit (address word 01); carry out selection at idling.
  => Page 2

-> Indicated on display:

```
Rapid data transfer      HELP
Select function XX
```

- Input 04 for "Initiate basic setting" and confirm with Q.

-> Indicated on display:

```
Basic setting      HELP
Input display group number XX
```

- Input 00 for "Display group number" and confirm with Q.

-> Indicated on display:
(1...10 = Display zones)

```
System in basic setting 0
     1     2     3     4     5     6
7     8     9     10
```

- Check ignition timing.
  Specification: 4..8 ° before TDC1)

With stroboscope:

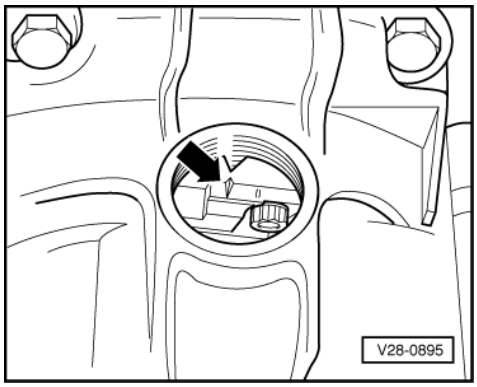

- -> Direct at ignition timing notch.

- If necessary adjust ignition timing by turning the distributor:

Protected by copyright. Copyright by Volkswagen AG. Volkswagen AG does not guarantee or accept any liability with respect to the correctness of information in this document. Copyright by Volkswagen AG. Unauthorised use or commercial purposes, part or in whole, is not permitted unless authorised by Volkswagen AG.
satelettronica

Setting figure: 6 ± 1° before TDC1)

1) Up-to-date specifications:

=> Exhaust emissions test binder

- Press ⇒ key.
- Input 06 for "End output" and confirm with Q.

1.7 - Checking ignition timing control

Special tools, testers and auxiliary items

- Ignition tester V.A.G 1767 or V.A.G 1367 with HT pick-up clamp V.A.G 1367/8

Check conditions

- No faults stored in fault memory
  => Page 3 , interrogating fault memory
- Engine oil temperature min. 80 °C
- Ignition timing OK., checking
  => Page 69

Test sequence

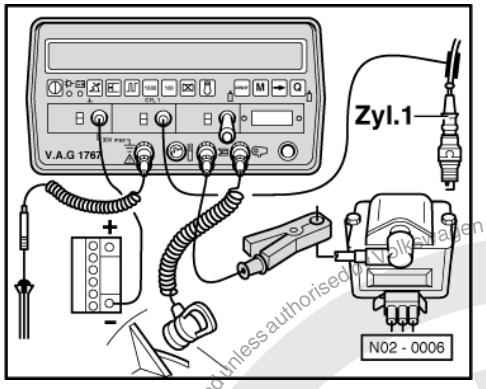

- -> Connect ignition tester V.A.G 1767 or ignition tester V.A.G 1367 with HT pick-up clamp V.A.G 1367/8.
- Start engine and run at idling speed.
- Set ignition tester to 3000 rpm.
- Slowly increase speed to slightly above 3000 rpm until the ignition timing (advance figure) is indicated.
  Specification:
  30...42 ° BTDC

1.8 - Checking Hall sender

Special tools, testers and auxiliary items

- Test box V.A.G 1598/18
- Hand multimeter V.A.G 1526 or multimeter V.A.G 1715
- Adapter set V.A.G 1594
- Current flow diagram

Test conditions

- Fault on Hall sender recognised by self diagnosis

satelettronica
Protected by copyright. Copying for private or commercial purposes, in part or in whole, is not permitted unless authorised by Volkswagen AG. Volkswagen AG does not guarantee or accept any liability with respect to the correctness of information in this document. Copyright by Volkswagen AG.

Note:

When the fault memory is interrogated with engine stationary without having operated the starter for at least 6 seconds, the fault "Hall sender -G40, no signal" will be displayed, even if no fault is present.

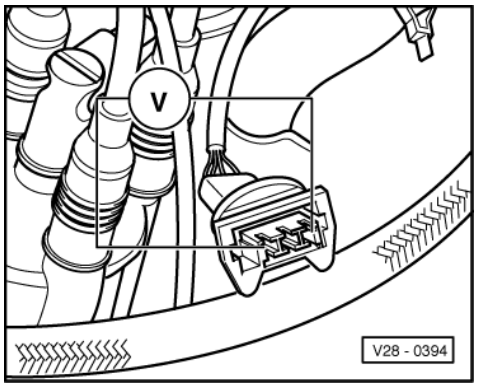

Test sequence

- Pull plug off Hall sender (distributor).
- -> Connect multimeter to measure voltage with aux. cables from V.A.G 1594 to the outer contacts of the plug.
- Switch on ignition.
  Specification: At least 9 V
- Switch off ignition

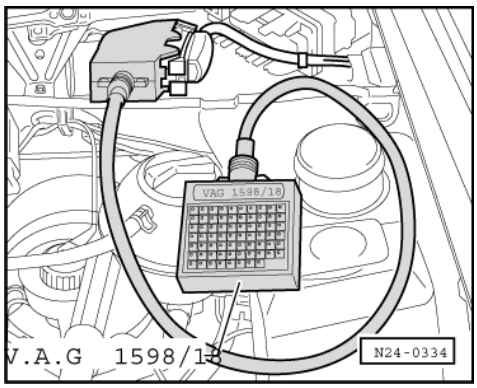

- -> Connect test box V.A.G 1598/18 to control unit wiring loom.
- Check wiring between test box and 3 pin connector for open circuit according to current flow diagram.
  Contact 1+socket 20
  Contact 2+socket 13
  Contact 3+socket 8
  Wire resistance: Max. 1.5 ω
- Additionally check wires for short to one another.
  Specification: ∞ω

If no wiring fault is detected and voltage was present between contacts 1+3:

- Renew distributor with Hall sender
  =>Page 66 , Item 12 .

If no wiring fault is detected and no voltage was present between contacts 1+3:

- Renew Mono Motronic control unit (J257)
  =>Page 19 , item 2 .

Protected by copyright. Copying for private or commercial purposes, in part or in whole, is not permitted unless authorised by Volkswagen AG. Volkswagen AG does not guarantee or accept any liability with respect to the correctness of information in this document. Copyright by Volkswagen AG.
satelettronica

1.9 - Checking ignition transformer

Special tools, testers and auxiliary items

- Hand multimeter V.A.G 1526 or multimeter V.A.G 1715
- Adapter set V.A.G 1594

Test sequence

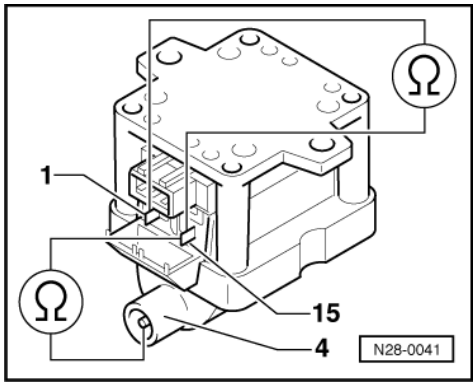

- Pull connector and H.T. cable off ignition transformer (N152).
- -> Check primary resistance with hand multimeter V.A.G 1526 between terminals 1 and 15.
  Specification: 0.5...0.7 ω
- Check secondary resistance with hand multimeter between terminals 4 and 15.
  Specification: 3...4 kω

If the specifications are not attained:

- Replace ignition transformer.

1.10 - Checking ignition transformer output stage

Special tools, testers and auxiliary items

- Test box V.A.G 1598/18
- Hand multimeter V.A.G 1526 or multimeter V.A.G 1715
- Diode test lamp V.A.G 1527
- Adapter set V.A.G 1594
- Current flow diagram

Check conditions

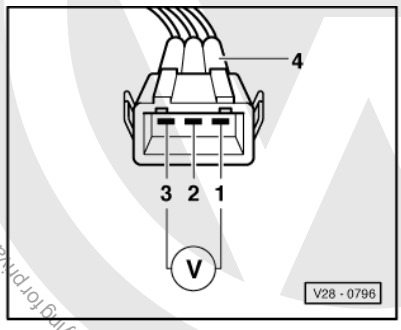

- Hall sender OK.

Protected by copyright. Copying for private or commercial purposes, in part or in whole, is not permitted unless authorised by Volkswagen AG. Volkswagen AG does not guarantee or accept any liability with respect to the correctness of information in this document. Copyright by Volkswagen AG.
satelettronica

- Ignition transformer OK.

Checking voltage supply

- Pull 3 pin plug off ignition transformer.
- -> Connect multimeter to measure voltage with aux. cables from V.A.G 1594 to the contacts 1+3 of the disconnected connector.
- Switch on ignition.
  Specification: Min. 11 V

If no voltage is present:

- Switch off ignition.
- Check wire between 3 pin connector contact 1 and earth for open circuit according to current flow diagram.
  Wire resistance: Max. 1.5 ω
- Check wire between 3 pin connector contact 3 and relay plate for open circuit according to current flow diagram.
  Wire resistance: Max. 1.5 ω

Checking activation

- Disconnect plug for injector and intake air preheating from the injection unit.

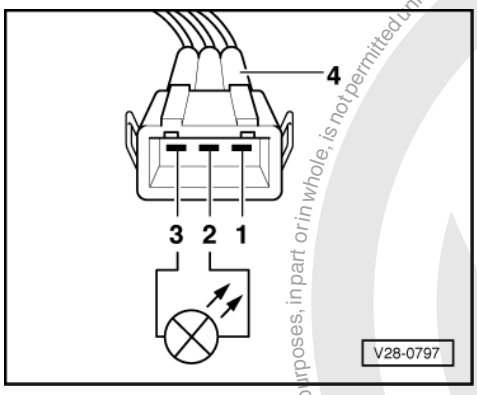

- -> Connect diode test lamp V.A.G 1527 with aux. cables from V.A.G 1594 and adapters V.A.G 1594/15 to contacts 2+3 of connector -4-.
- Operate starter and check ignition signal from Mono-Motronic control unit.
  LED must flicker

The LED does not flicker:

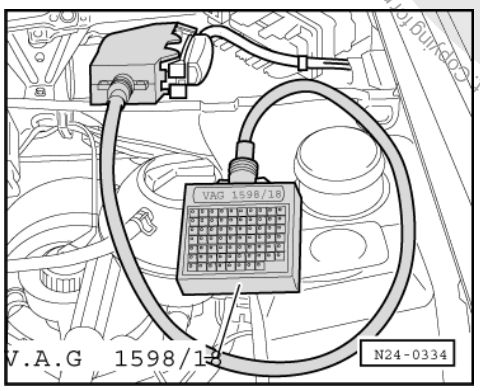

- -> Connect test box V.A.G 1598/18 to control unit wiring loom.
- Check wire between test box socket 24+3 pin connector contact 2 for open circuit according to current flow diagram.
  Wire resistance: Max. 1.5 ω
- Additionally check wires for short to one another.
  Specification: ∞ω

Protected by copyright. Copying for private or commercial purposes, in part or in whole, is not permitted unless authorised by Volkswagen AG. Volkswagen AG does not guarantee or accept any liability with respect to the correctness of information in this document. Copyright by Volkswagen AG.
satelettronica

If no wiring fault is detected and voltage was present between contacts 1+3:

- Renew Mono Motronic control unit (J257)
  =>Page 19 , item 2 .

If the voltage supply and activation is OK.:

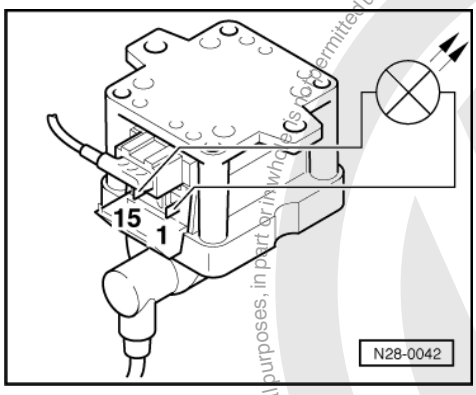

- Connect 3 pin plug and H.T. cable to ignition transformer.
- -> Connect diode test lamp with aux. cables and clamps to the contacts 1 and 15 on ignition transformer.

Warning! During the following test do not touch the terminals of the ignition transformer or test cables.

- Operate starter.
  The LED must flicker,
  if necessary renew output stage.

Protected by copyright. Copying for private or commercial purposes, in part or in whole, is not permitted unless authorised by Volkswagen AG. Volkswagen AG does not guarantee or accept any liability with respect to the correctness of information in this document. Copyright by Volkswagen AG.
satelettronica